Drax 11.6" Schematic

SKL-Y

2016-03-21

REV : A00

www.teknisi-indonesia.com

DY : None Installed

<Core Design>

Wistron Corporation
21F, 88, Sec.1, Hsin Tai Wu Rd., Hsichih,
Taipei Hsien 221, Taiwan, R.O.C.

Title	***Cover Page***	
Size A4	Document Number ***Drax SKL Y***	Rev ***A00***
Date: Monday, March 21, 2016	Sheet 1 of 109	

Project code : 4PD06Q010001
PCB P/N : 15250
Revision : A00

Drax 11.6" Block Diagram

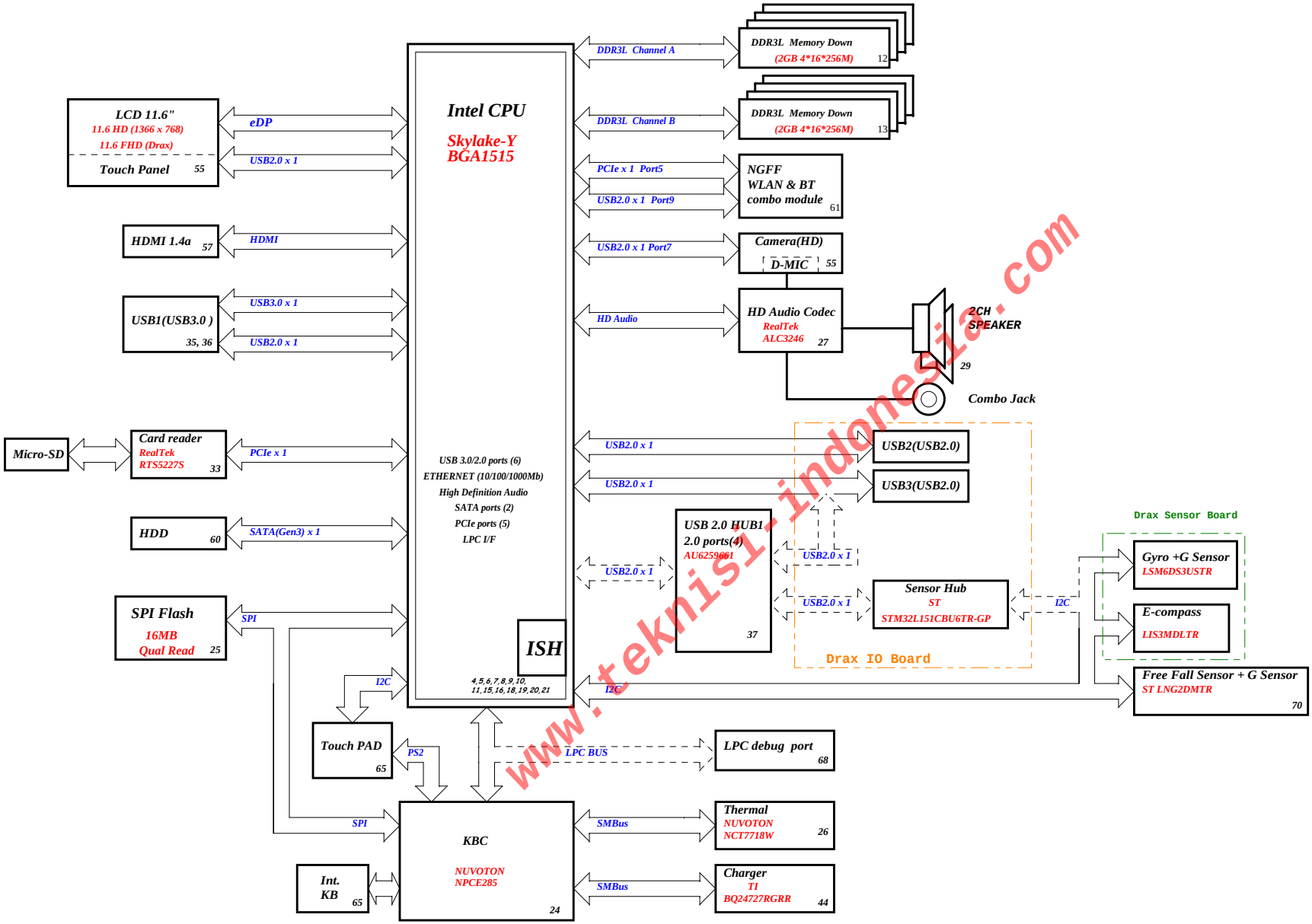

CHARGER BQ24727RGRR 44	
INPUTS	OUTPUTS
19V_DCBATOUT	12V_BT+

SYSTEM DC/DC SY8288CRAC SY8286BRAC 45	
INPUTS	OUTPUTS
19V_DCBATOUT	3D3V_AUX_S5 5V_PWR_2 5V_S5 3D3V_S5

CPU Core Power NCP81208MNTXG NCP81381MNTXG *2 SY8288RAC NCP81253MNTBG 46-50	
INPUTS	OUTPUTS
19V_DCBATOUT	+VCC_CORE +VCCGT 1D0V_S5 +VCCSA

DDR3L SUS SY8288RAC APL5338XAI 51	
INPUTS	OUTPUTS
19V_DCBATOUT	1D35V_S3 0D675V_S0

SYSTEM DC/DC APL5930KAI 53	
INPUTS	OUTPUTS
3D3V_S5	1D8V_S5

PCB LAYER

L1:Top	L5:Signal
L2:Signal	L6:GND
L3:GND	L7:Signal
L4:Signal	L8:Bottom

www.teknisi-indonesia.com

<Core Design>

Wistron Corporation
21F, 88, Sec.1, Hsin Tai Wu Rd., Hsichih,
Taipei Hsien 221, Taiwan, R.O.C.

Title: Block Diagram

Size: C | Document Number: Drax SKL Y | Rev: A00

Date: Tuesday, March 22, 2016 | Sheet 2 of 109

Blanking

www.teknisi-indonesia.com

<Core Design>

Wistron Corporation
21F, 88, Sec.1, Hsin Tai Wu Rd., Hsichih,
Taipei Hsien 221, Taiwan, R.O.C.

Title	***Reserved***	
Size A4	Document Number ***Drax SKL Y***	Rev ***A00***
Date: Thursday, March 17, 2016	Sheet 3 of 109	

SSID = CPU

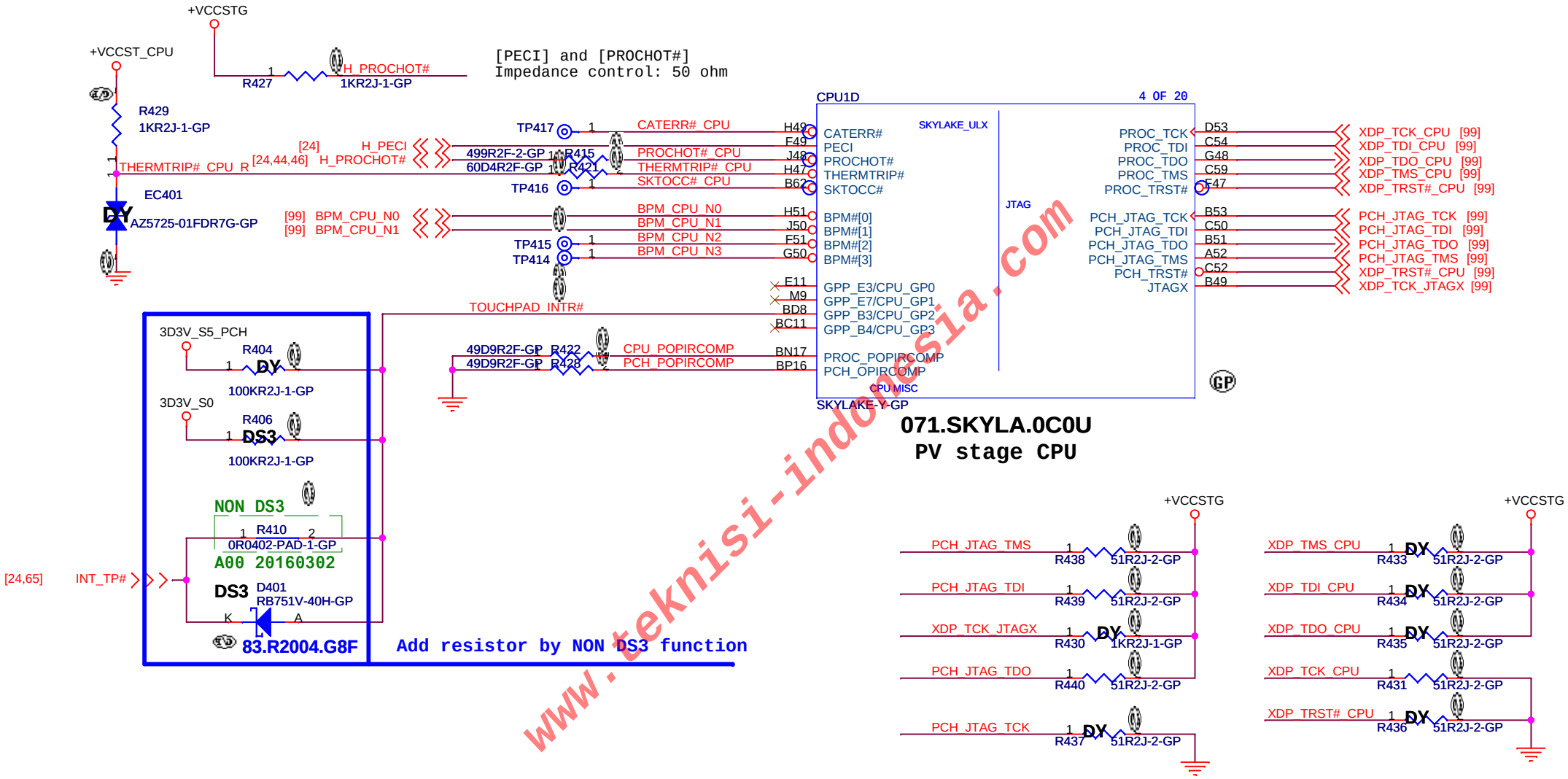

www.teknisi-indonesia.com

<Core Design>

Wistron Corporation
21F, 88, Sec.1, Hsin Tai Wu Rd., Hsichih,
Taipei Hsien 221, Taiwan, R.O.C.

Title: CPU (JTAG/CPU SIDE BAND)

Size	Document Number	Rev
A4	Drax SKL Y	A00

Date: Thursday, March 17, 2016 Sheet 4 of 109

SSID = CPU

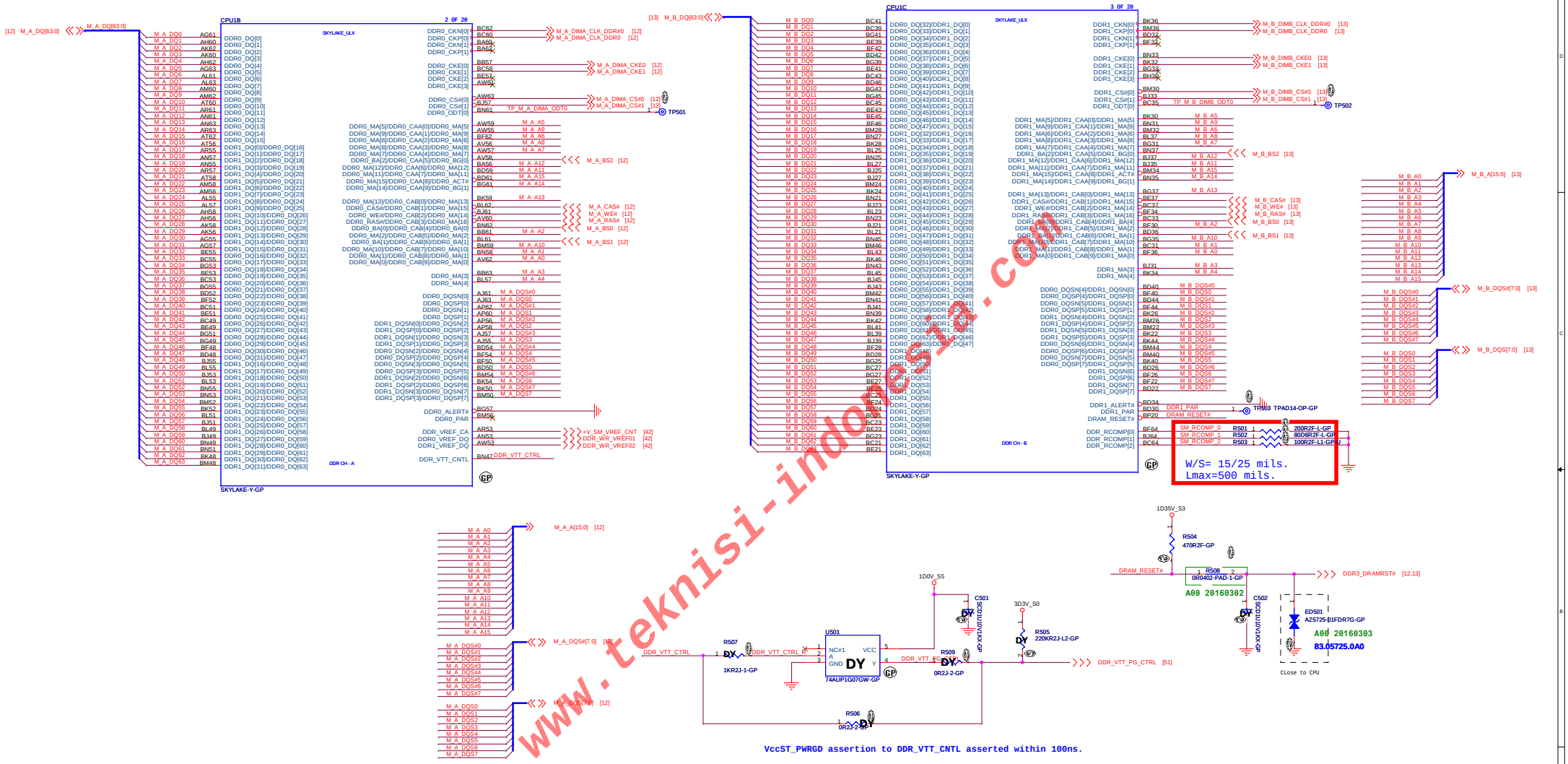

www.teknisi-indonesia.com

Wistron Corporation
21F, 88, Sec.1, Hsin Tai Wu Rd., Hsichih,
Taipei Hsien 221, Taiwan, R.O.C.

Title	CPU(DDR)
Size A2	Document Number: Drax SKL Y
Rev	A00
Date: Monday, March 21, 2016	Sheet 5 of 109

SSID = CPU

PCH strap pin:

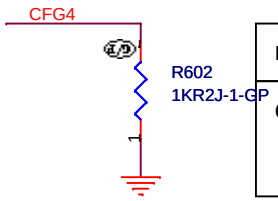

DISPLAY PORT PRESENCE STRAP	
CFG[4]	0 : ENABLED AN EXTERNAL DISPLAY PORT DEVICE IS CONNECTED TO THE EMBEDDED DISPLAY PORT 1 : DISABLED NO PHYSICAL DISPLAY PORT ATTACHED TO EMBEDDED DISPLAY PORT

SKL(#543016):
Processor strap CFG[4] should be pulled low to enable embedded DisplayPort*

www.teknisi-indonesia.com

<Core Design>

Wistron Corporation
21F, 88, Sec.1, Hsin Tai Wu Rd., Hsichih,
Taipei Hsien 221, Taiwan, R.O.C.

Title: CPU (CFG/RSVD)

Size: A4 | Document Number: Drax SKL Y | Rev: A00

Date: Thursday, March 17, 2016 | Sheet 6 of 109

SSID = CPU

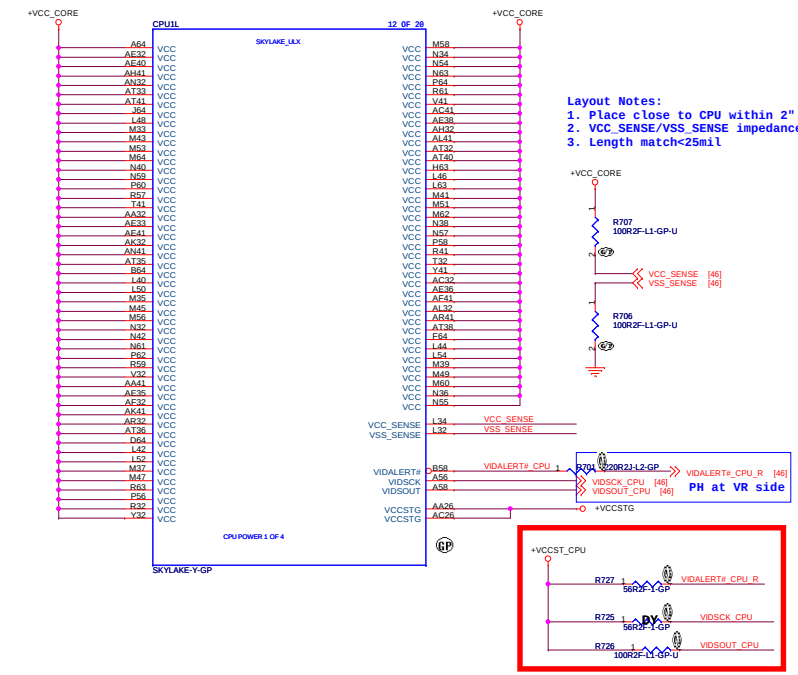

Layout Notes:
1. Place close to CPU within 2"
2. VCC_SENSE/VSS_SENSE impedance=50 ohm
3. Length match<25mil

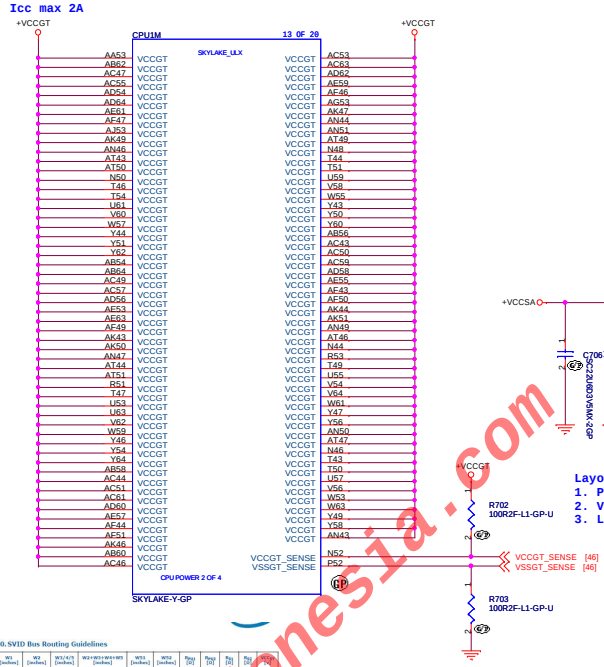

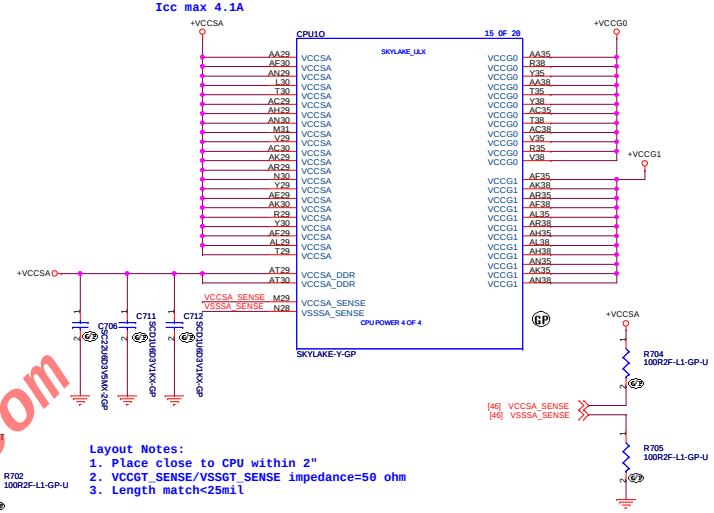

Layout Notes:
1. Place close to CPU within 2"
2. VCCGT_SENSE/VSSGT_SENSE impedance=50 ohm
3. Length match<25mil

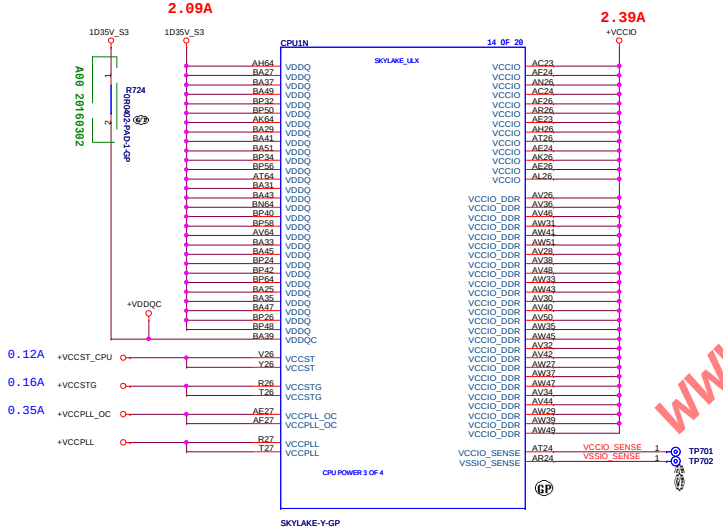

Table 10-10. SVID Bus Routing Guidelines

Signal	W1 (inches)	W2 (inches)	W3/4/5 (inches)	W2+W3+W4+W5 (inches)	W51 (inches)	W52 (inches)	Rpu (Ω)	Rpd (Ω)	Rs1 (Ω)	Rs2 (Ω)	Vcccst
VIDSOUT	0.5-3	1-15	0.5-4	3-17	<0.1	<0.1	100	100	56	18	1.8
VIDSCK							45	90	56	56	1.8
VIDALERT#							56	Emulate	100	100	1.8

Note: For additional information regarding SVID and power management please refer to Chapter 51, "Power Architecture Guide" in this document.

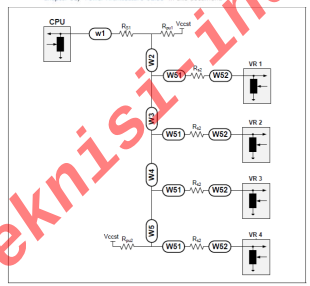

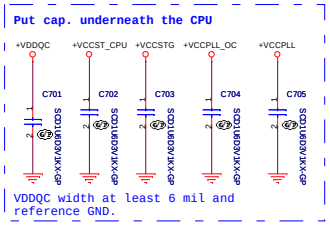

Table 52-2. Decoupling Requirements for Skylake Y Processor (Sheet 2 of 4)

Domain	Backside Cap	Primary Side Cap	Placement Guideline
V_{DDQC}	1x 0.1 uF 0201		Filter implemented between VDDQC and VDDQ. Capacitor tapped directly to VDDQC first and connect to VDDQ through L (routed as trace). Please refer to Figure 66-6 for details.
Vcc_{SA_DDR}	1x 0.1 uF 0201		Place on secondary side, underneath the package Refer to Note 4 for component placement
		1x 22 uF 0603	Place as close to the package as possible
Vcc_{PLL_OC}	1x 0.1 uF 0201		Place on secondary side, underneath the package Please refer to Figure 52-4 below. Do not route Vcc_{PLL_OC} closest adjacent layer over any power net other than ground.
Vcc_{PLL}	1x 0.1 uF 0201		Place on secondary side, underneath the package Please refer to Figure 52-5 below. Do not route Vcc_{PLL}, Vcc_{ST}, Vcc_{STG} closest adjacent layer over any power net other than ground.
Vcc_{ST} [7]	1x 0.1 uF 0201		
Vcc_{STG} [8]	1x 0.1 uF 0201		

www.teknisi-indonesia.com

<Core Design>

Wistron Corporation
21F, 88, Sec.1, Hsin Tai Wu Rd., Hsichih, Taipei Hsien 221, Taiwan, R.O.C.

Title: CPU(VCC)

Size: A2 | Document Number: Drax SKL Y | Rev: A00

Date: Monday, March 21, 2016 | Sheet 7 of 109

SSID = CPU

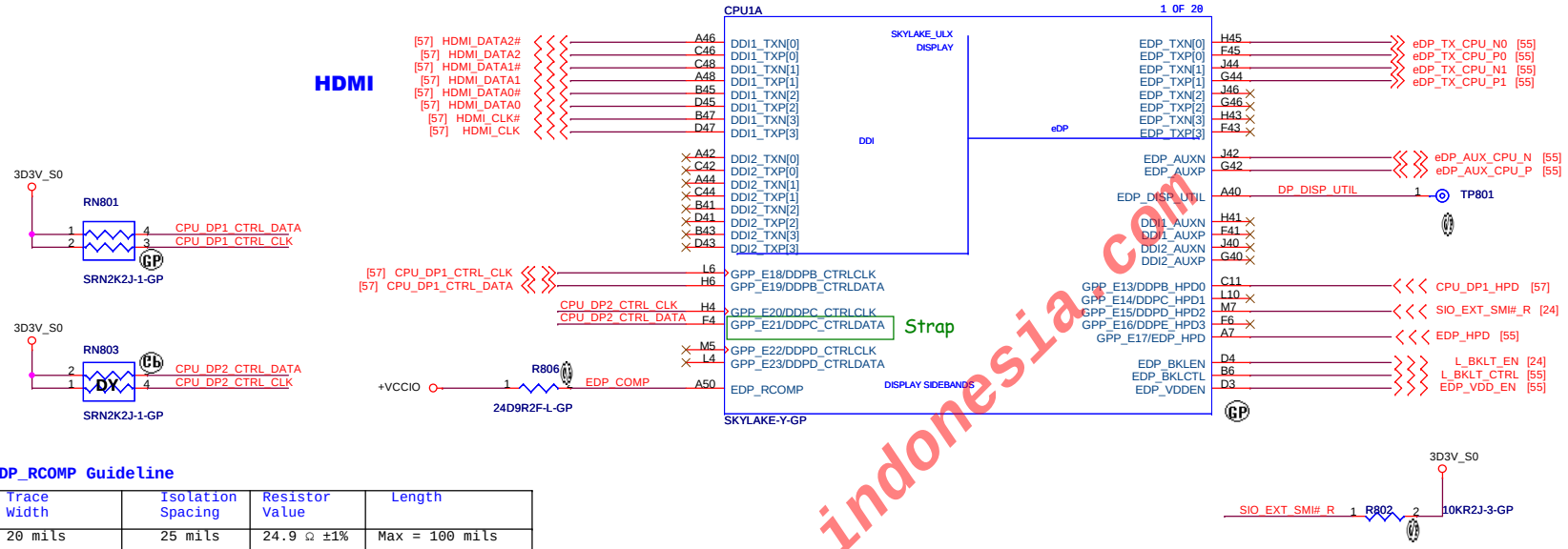

(#543016) eDP_RCOMP Guideline

Signal	Trace Width	Isolation Spacing	Resistor Value	Length
eDP_RCOMP	20 mils	25 mils	24.9 Ω ±1%	Max = 100 mils

(#543016) DDI Disabling and Termination Guidelines

Port	Strap	Enable Port	Disable Port
Port 1	DDPB_CTRLDATA	PU to 3.3 V with 2.2-k ±5% resistor	NC
Port 2	DDPC_CTRLDATA	PU to 3.3 V with 2.2-k ±5% resistor	NC

Design Guideline:
Skylake processor signal eDP_RCOMP should be connected to the VCCIO rail via a single 24.9 ±1% Ω resistor.

www.teknisi-indonesia.com

<Core Design>

Wistron Corporation
21F, 88, Sec.1, Hsin Tai Wu Rd., Hsichih,
Taipei Hsien 221, Taiwan, R.O.C.

Title: CPU (DISPLAY)

Size: A3 | Document Number: Drax SKL Y | Rev: A00

Date: Thursday, March 17, 2016 | Sheet 8 of 109

SSID = CPU

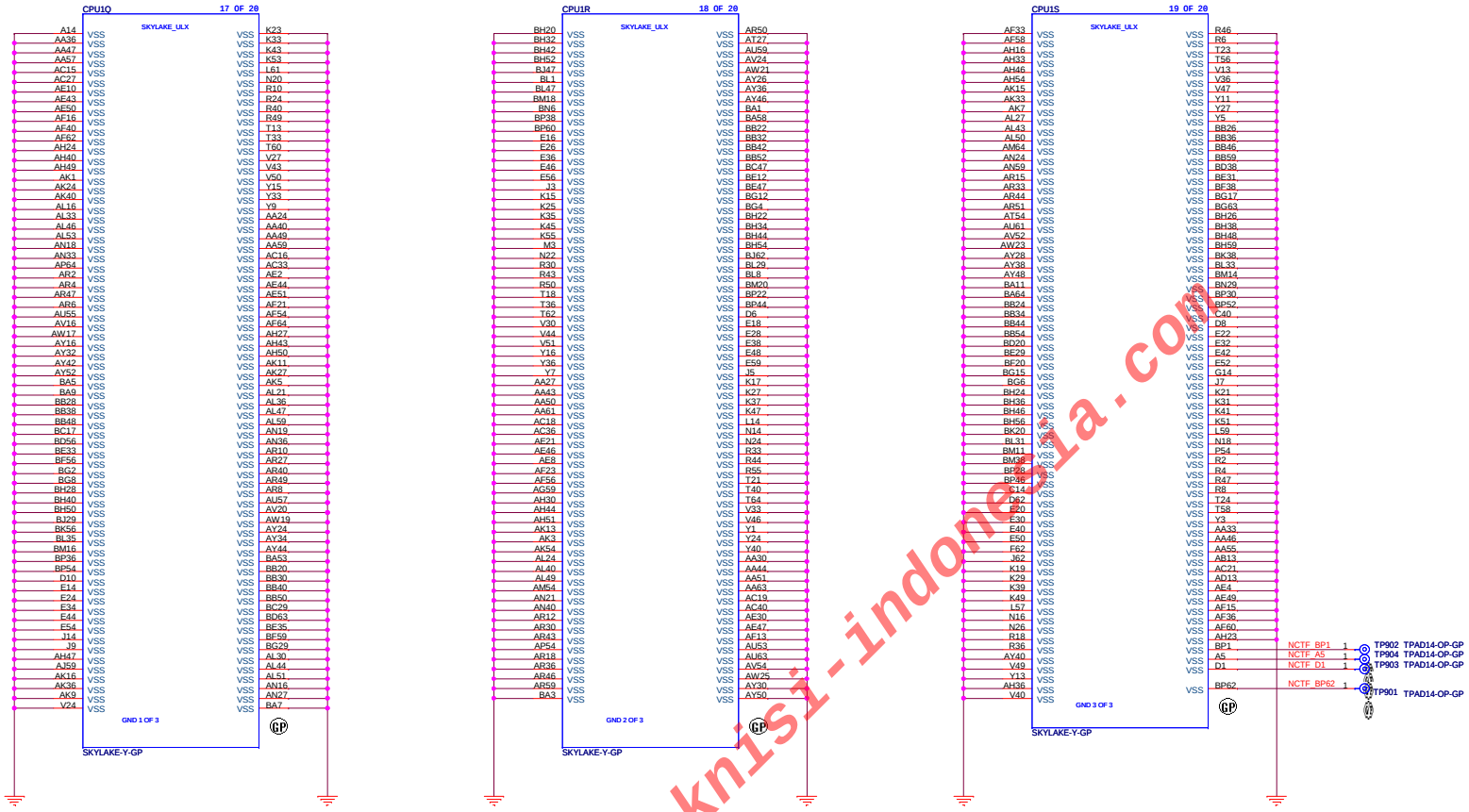

www.teknisi-indonesia.com

Table 45-3. Skylake Y Processor Corner NCTF Motherboard Test Point Example

Pin Number	Pin Name	Description	Corner
BP64	NCTFVDDQ	Test Point (TP)	Corner BP64
BN64	NCTFVDDQ	Test Point (TP)	
BP62	NCTFVSS	Test Point (TP)	
BP1	NCTFVSS	Test Point (TP)	Corner BP1
D1	NCTFVSS	Test Point (TP)	Corner A1
A5	NCTFVSS	Test Point (TP)	
A64	NCTFVCC	Test Point (TP)	Corner A64
B64	NCTFVCC	Test Point (TP)	

Note: Refer to Processor EDS for more details on NCTF information.

SSID = CPU

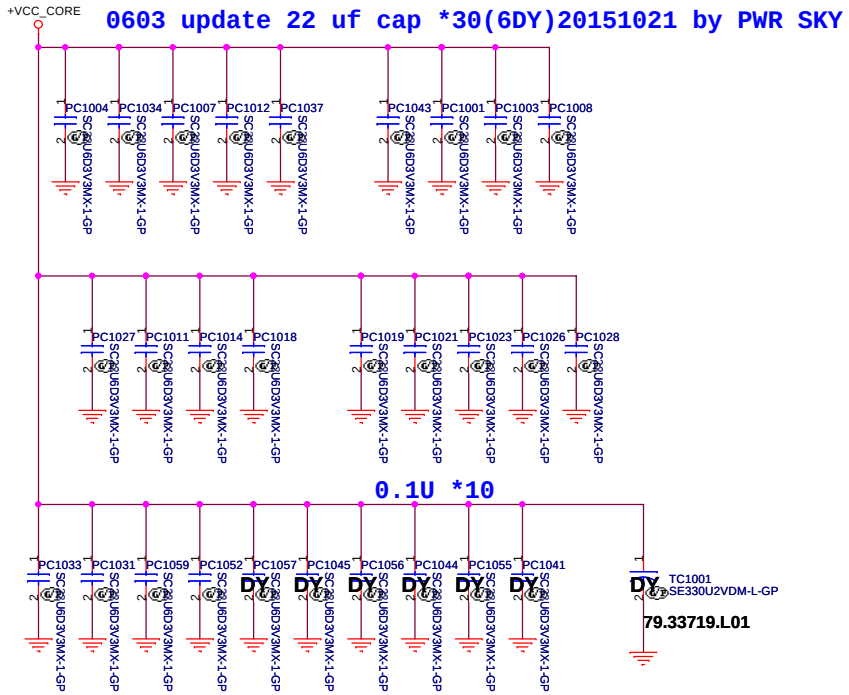

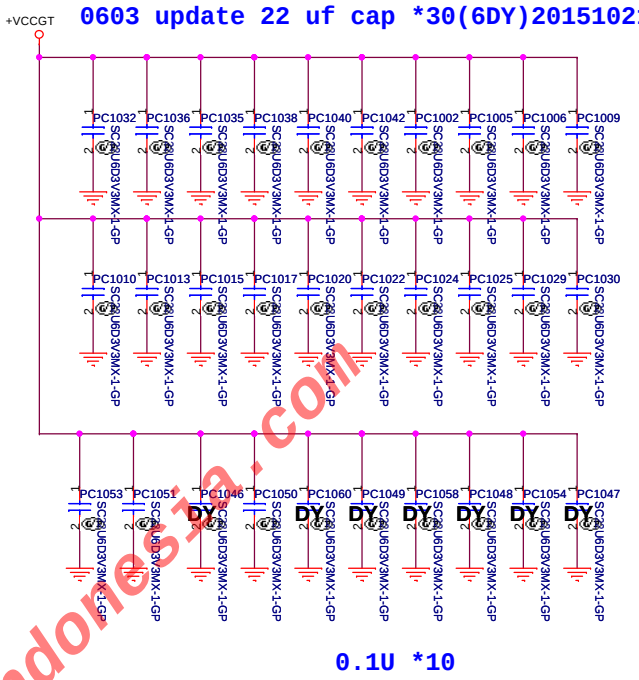

www.teknisi-indonesia.com

Decoupling Requirements for SKL Y Processor (Sheet 1 of 4)

Domain	Backside cap	Primary side cap	Placement guideline
Vcc_{GT}	12x 0.1uF 0201		Place on secondary side, underneath the package Refer to Note 2 for component placement
	40x 0.1uF 0201 (Placeholder)		
		2x 1uF 0402	Place as close to the package as possible. Placement order: Package edge > 0402 1uF caps > 0402 10uF caps >0805 caps > Power source
		2x 10uF 0402 (Placeholder)	
		9x 47uF 0805 (6.3V)[1]	
Vcc	20x 0.1uF 0201		Place on secondary side, underneath the package Refer to Note 3 for component placement
	12x 0.1uF 0201 (Placeholder)		
		8x 10uF 0402	Place as close to the package as possible. Placement order: Package edge > 0402 caps > 0805 caps > Power source
		6x 47uF 0805 (6.3V)[1]	
		2x 47uF 0805 (Placeholder)	

<Core Design>

Wistron Corporation
21F, 88, Sec.1, Hsin Tai Wu Rd., Hsichih,
Taipei Hsien 221, Taiwan, R.O.C.

Title: CPU (Power CAP1)

Size: A3 | Document Number: Drax SKL Y | Rev: A00

Date: Monday, March 21, 2016 | Sheet 10 of 109

SSID = CPU

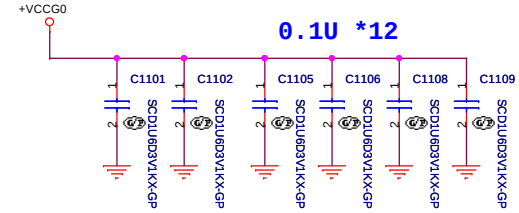

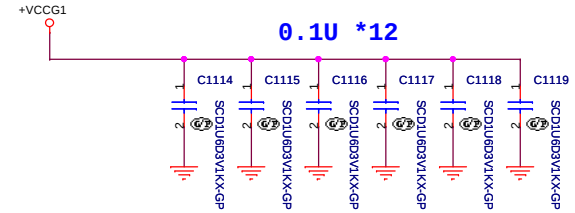

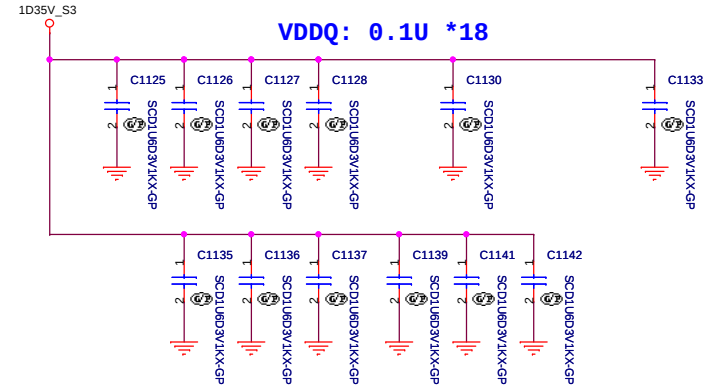

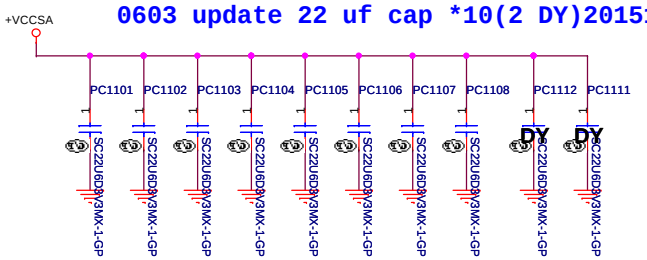

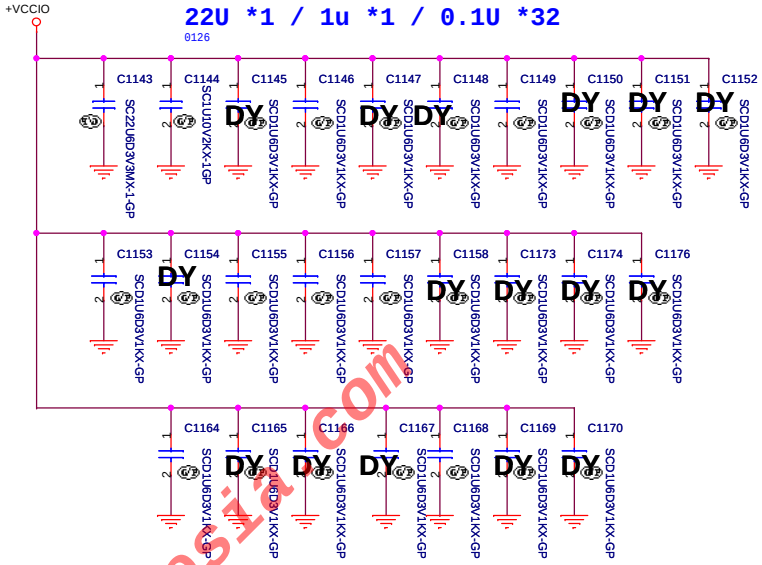

Decoupling Requirements for Skylake Y Processor (Sheet 2 of 4)

Domain	Backside Cap	Primary Side Cap	Placement Guideline
Vcc_{G0}	12x 0.1 uF 0201		Place on secondary side, underneath the package
Vcc_{G1}	12x 0.1 uF 0201		Place on secondary side, underneath the package
V_{DDQ}	18x 0.1 uF 0201		Place on secondary side, underneath the package
V_{DDQC}	1x 0.1 uF 0201		Filter implemented between VDDQC and VDDQ. Capacitor tapped directly to VDDQC first and connect to VDDQ through L (routed as trace). Please refer to Figure 66-6 for details.
Vcc_{IO}	13x 0.1 uF 0201		Isolation between DDR and display area. Place on secondary side, underneath the package Please refer to Figure 52-1 below
		1x 1 uF 0402	Place as close to the package as possible. Placement order: Package edge > 0402 caps > 0805 caps > Power source
Vcc_{SA}	1x 1 uF 0201		Place on secondary side, underneath the package Refer to Note 4 for component placement Please refer to Figure 52-3 below
		4x 22 uF 0603	Place as close to the package as possible

www.teknisi-indonesia.com

<Core Design>

Wistron Corporation
21F, 88, Sec.1, Hsin Tai Wu Rd., Hsichih,
Taipei Hsien 221, Taiwan, R.O.C.

Title: CPU (Power CAP2)

Size: A3 | Document Number: Drax SKL Y | Rev: A00

Date: Monday, March 21, 2016 | Sheet 11 of 109

SSID = MEMORY

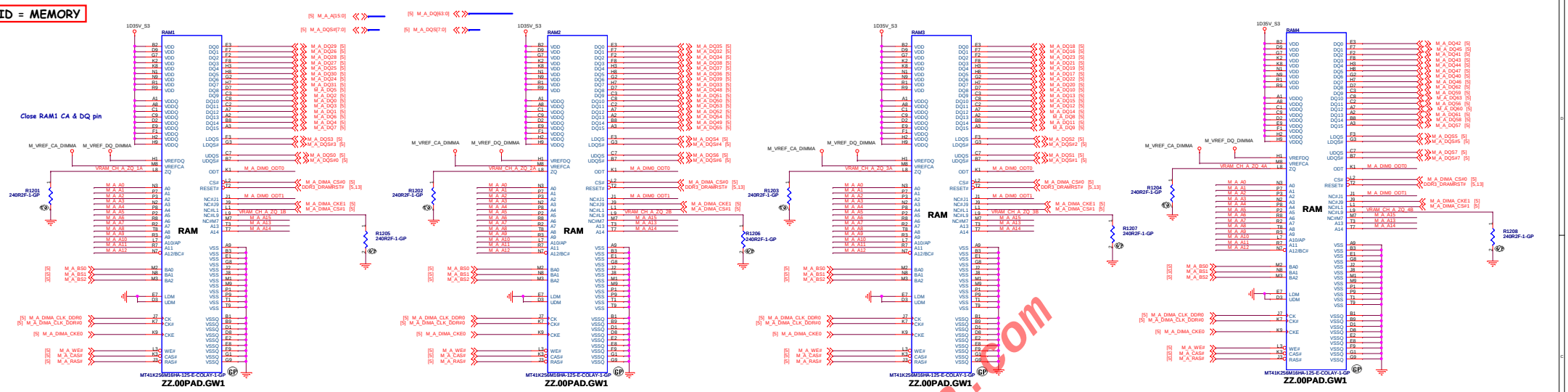

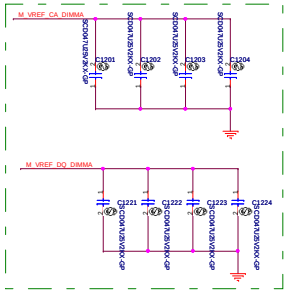

DIMM VREF FILTER CAPS

PLACE THESE CAPS NEAR TO RESPECTIVE DIMM PINS

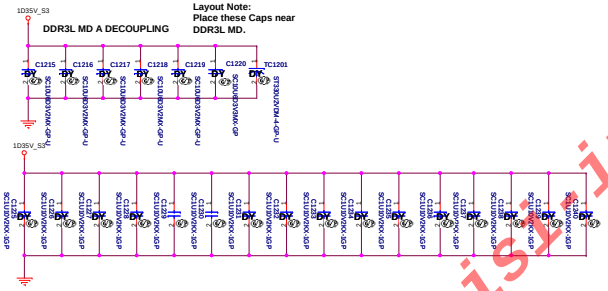

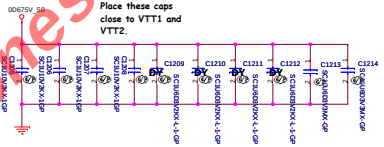

SSID = MEMORY

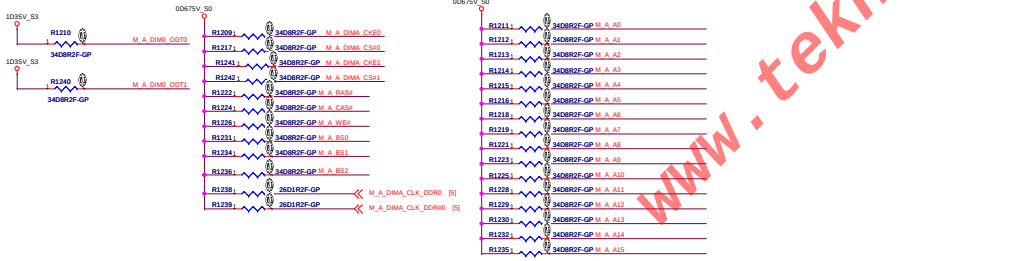

www.teknisiindonesia.com

<Core Design>

Wistron Corporation
21F, 88, Sec.1, Hsin Tai Wu Rd., Hsichih,
Taipei Hsien 221, Taiwan, R.O.C.

Title: DDR3L-Memorydown1

Size: Custom | Document Number: Drax SKL Y | Rev: A00

Date: Monday, March 27, 2017 | Sheet 12 of 109

SSID = MEMORY

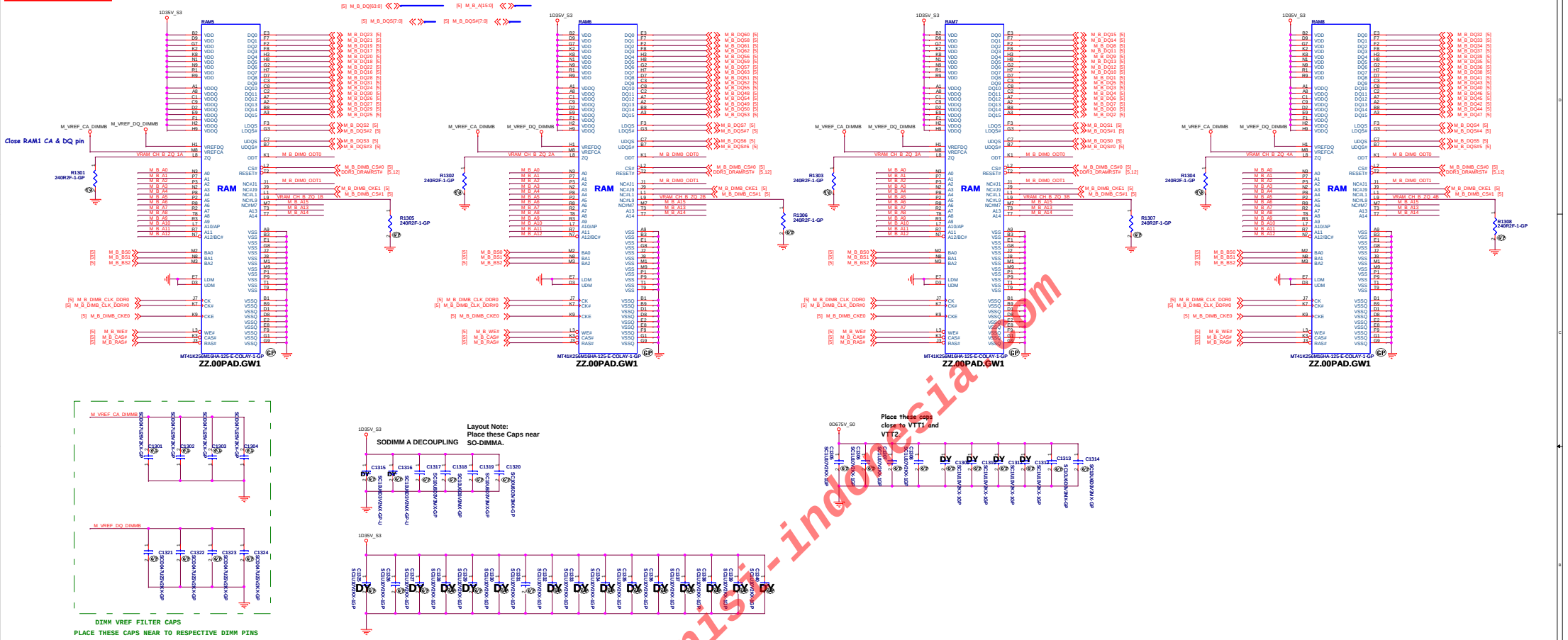

DIMM VREF FILTER CAPS

PLACE THESE CAPS NEAR TO RESPECTIVE DIMM PINS

Layout Note:
Place these Caps near
SO-DIMMA.

Place these caps
close to VTT1 and
VTT2

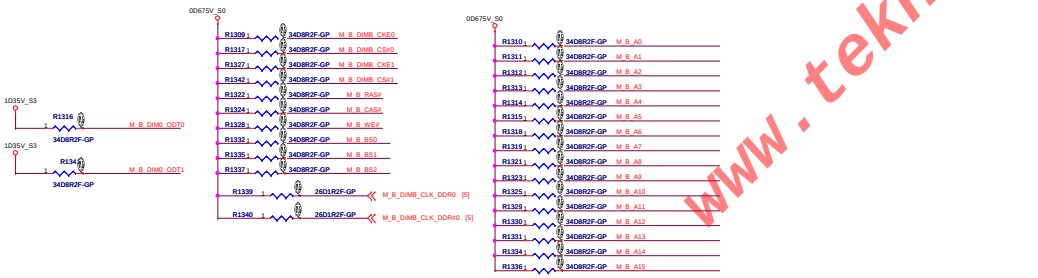

www.teknisi-indonesia.com

<Core Design>

Wistron Corporation
21F, 88, Sec.1, Hsin Tai Wu Rd., Hsichih,
Taipei Hsien 221, Taiwan, R.O.C.

Title: DDR3L-Memorydown2

Size: Custom | Document Number: Drax SKL Y | Rev: A00

Date: Monday, March 27, 2017 | Sheet 13 of 109

(Blanking)

www.teknisi-indonesia.com

<Core Design>

Wistron Corporation
21F, 88, Sec.1, Hsin Tai Wu Rd., Hsichih,
Taipei Hsien 221, Taiwan, R.O.C.

Title	Reserved	
Size A4	Document Number Drax SKL Y	Rev A00
Date: Monday, March 21, 2016	Sheet 14 of 109	

SSID = CPU

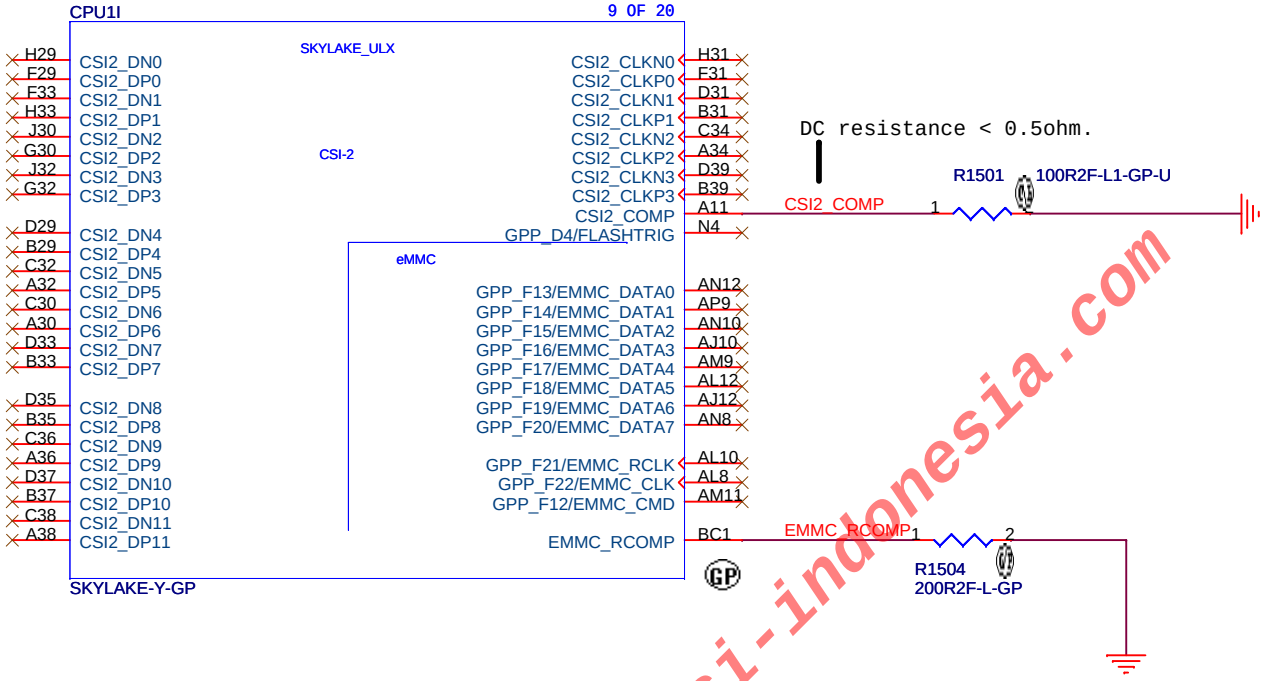

www.teknisi-indonesia.com

<Core Design>

Wistron Corporation
21F, 88, Sec.1, Hsin Tai Wu Rd., Hsichih,
Taipei Hsien 221, Taiwan, R.O.C.

Title	CPU (CSI2/EMMC)	
Size A4	Document Number Drax SKL Y	Rev A00
Date: Monday, March 21, 2016	Sheet 15 of 109	

SSID = PCH

USB Table

Pair	Device
1	USB3.0 on MB
2	USB 2.0 on DB
3	USB 2.0 on DB
5	TOUCH SCREEN
7	CAMERA
9	WLAN

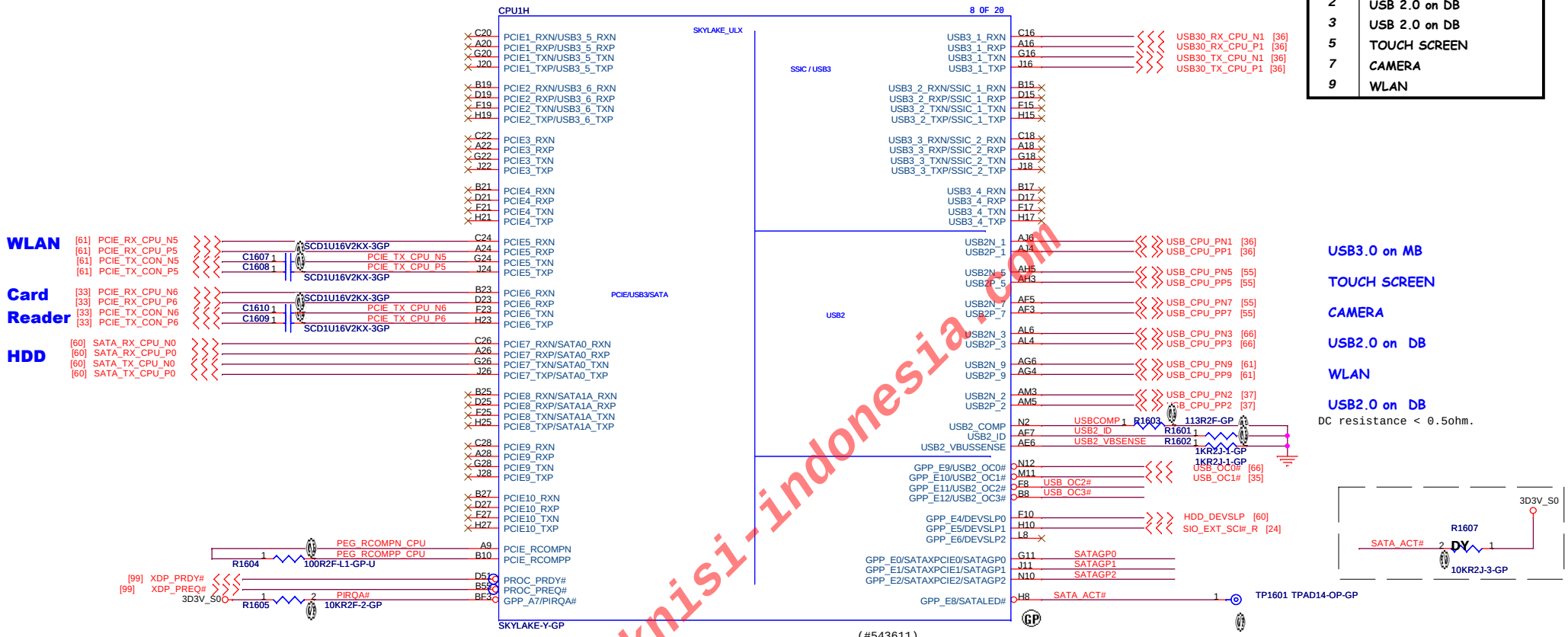

(#543611)
The SATALED# signal is open-collector and requires a weak external pull-up (8.2 kΩ to 10 kΩ) to Vcc3_3.

(#543016) When used as DEVSLP, no external pull-up or pull-down termination required from SATA Host DEVSLP.

www.teknisi-indonesia.com

<Core Design>

Wistron Corporation
21F, 88, Sec.1, Hsin Tai Wu Rd., Hsichih,
Taipei Hsien 221, Taiwan, R.O.C.

Title: CPU (PCIE/SATA/USB)

Size: A3 | Document Number: Drax SKL Y | Rev: A00

Date: Thursday, March 17, 2016 | Sheet 16 of 109

SSID = PCH

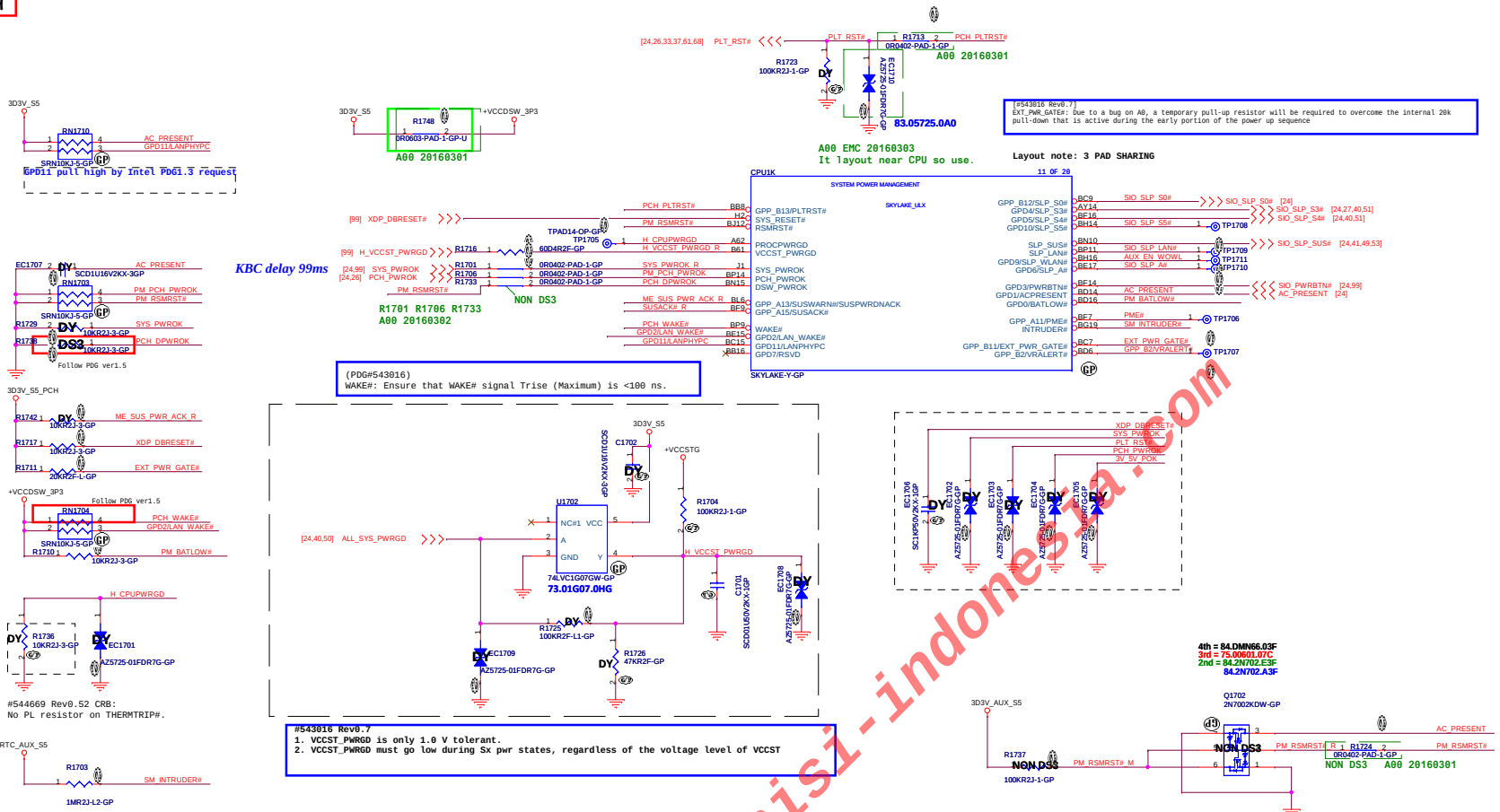

www.teknisi-indonesia.com

<Core Design>

Wistron Corporation
21F, 88, Sec.1, Hsin Tai Wu Rd., Hsichih,
Taipei Hsien 221, Taiwan, R.O.C.

Title: CPU (PM)

Size: A2 | Document Number: Drax SKL Y | Rev: A00

Date: Monday, March 21, 2016 | Sheet 17 of 109

SSID = PCH

PCH strap pin:

eSPI or LPC	Sampled at rising edge of RSMRST#
SML0ALERT# / GPP_C5	This signal has a weak internal pull-down. 0 = LPC Is selected for EC. 1 = eSPI Is selected for EC.

This signal has a weak internal pull-down.

PCH strap pin:

BOOT HALT	
SPI0_MOSI	0 = ENABLED 1 = DISABLED WEAK INTERNAL PU

This signal has a weak internal pull-up.

PCH strap pin:

TLS Confidentiality	
SMBALERT# / GPP_C2	* Low = Disable Intel ME Crypto TLS (Default) High = Enable Intel ME Crypto TLS

The internal pull-down is disabled after RSMRST# deasserts. to KBC, PL 100

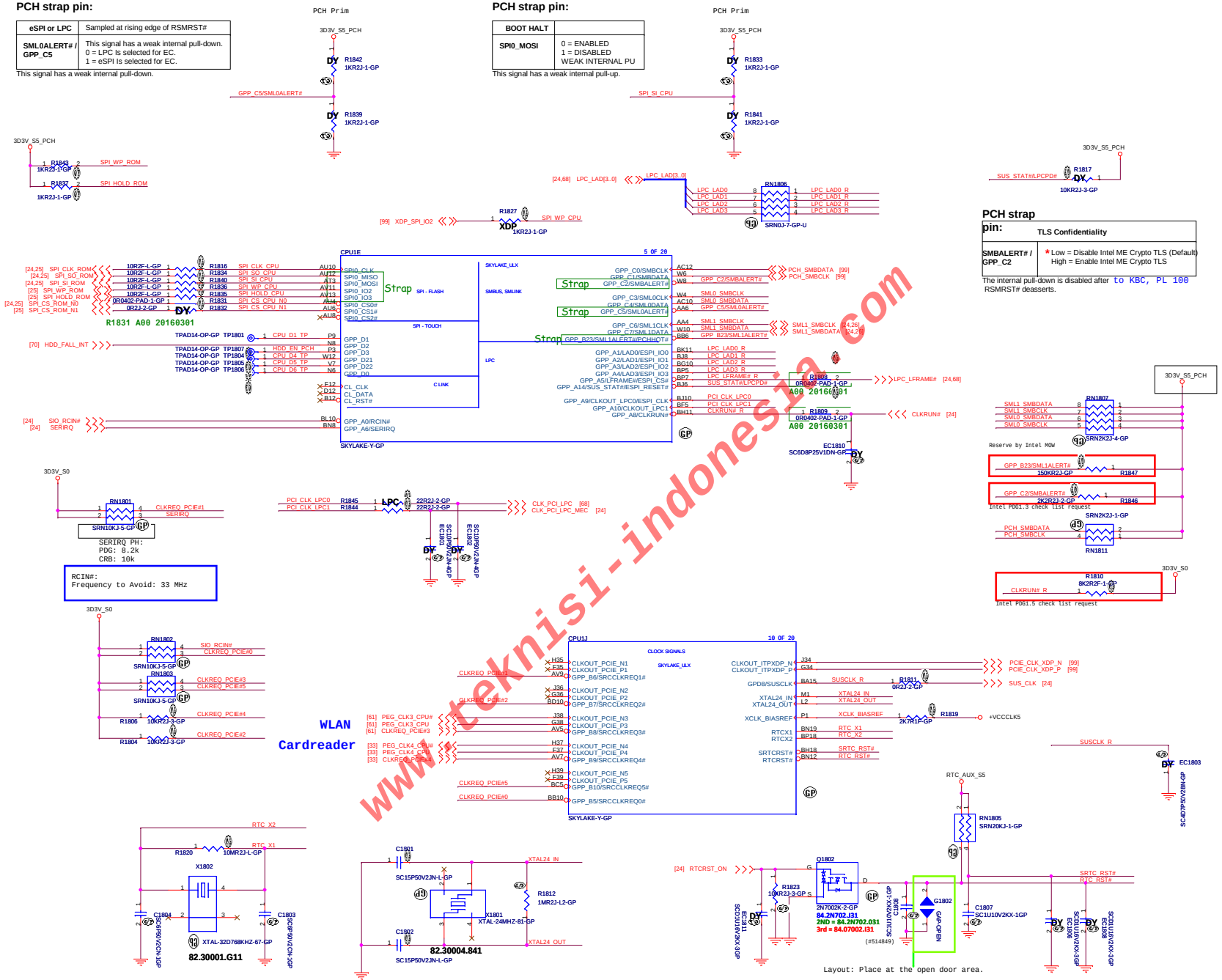

www.teknisi-indonesia.com

<Core Design>

Wistron Corporation
21F, 88, Sec.1, Hsin Tai Wu Rd., Hsichih,
Taipei Hsien 221, Taiwan, R.O.C.

Title: CPU (LPC/SPI/SMBS/RTC/CLK)

Size: A2 | Document Number: Drax SKL Y | Rev: A00

Date: Monday, March 21, 2016 | Sheet 18 of 109

SSID = PCH

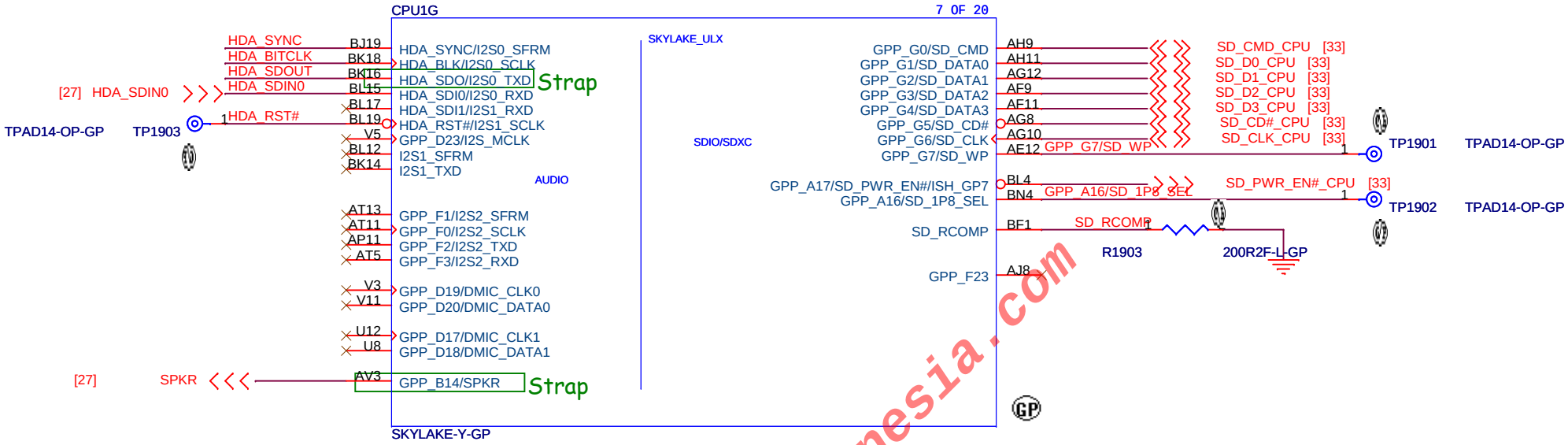

PCH strap pin:

NO REBOOT	
HDA_SPKR	Low = Enable (Default) * High = Disable

The internal pull-down is disabled after PLTRST# deasserts

PCH strap pin:

Flash Descriptor Security Overide/ Intel ME Debug Mode	
HDA_SDOUT	Low = Default * High = Enable

The internal pull-down is disabled after PLTRST# deasserts

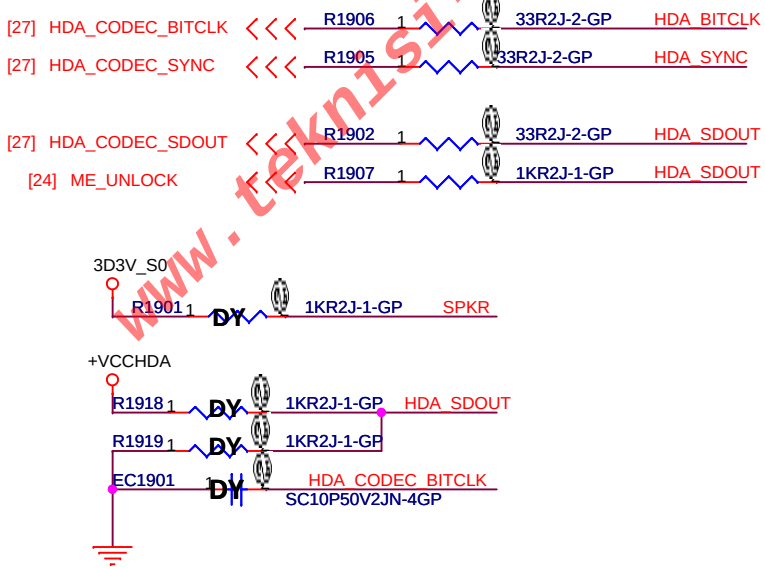

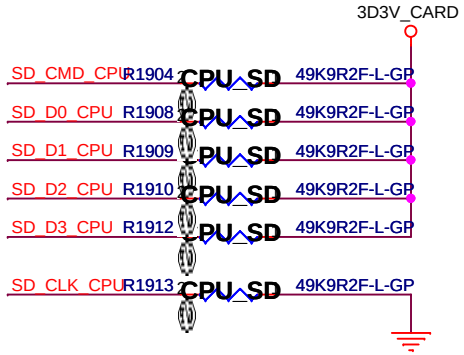

www.teknisi-indonesia.com

<Core Design>

Wistron Corporation
21F, 88, Sec.1, Hsin Tai Wu Rd., Hsichih,
Taipei Hsien 221, Taiwan, R.O.C.

Title: CPU (AUDIO/SDIO)

Size	Document Number	Rev
A4	Drax SKL Y	A00

Date: Thursday, March 17, 2016 Sheet 19 of 109

SSID = PCH

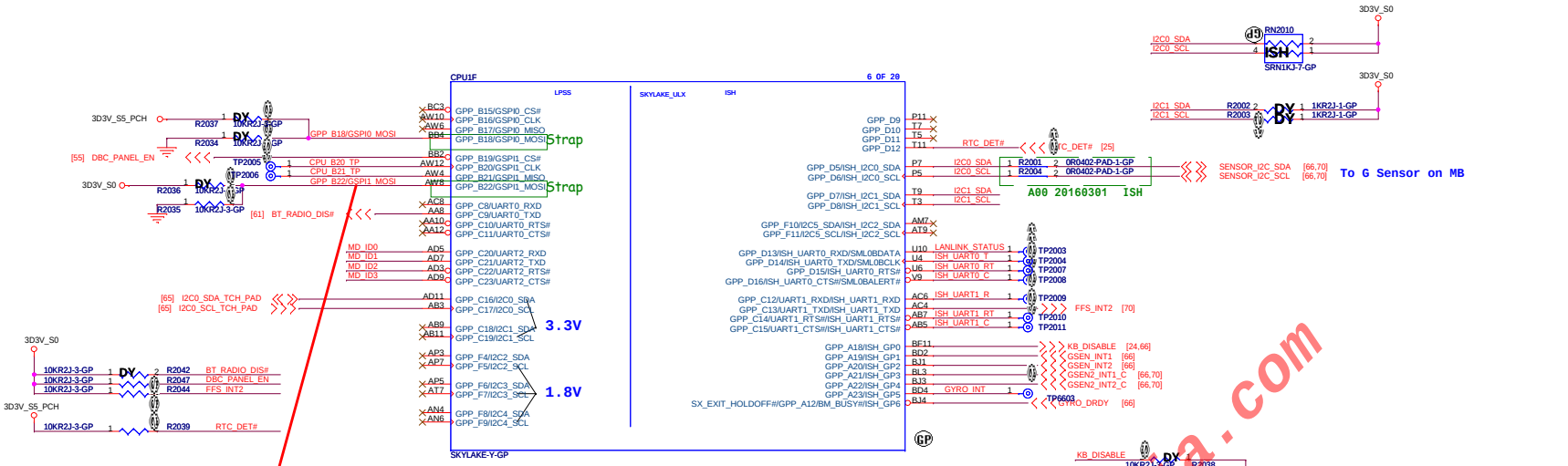

PCH strap pin:

Boot BIOS Strap Bit BBS	
Boot BIOS Destination	* Low = SPI (Default) High = LPC

The internal pull-down is disabled after PLTRST# deasserts

Need double confirm, GPIO table set to GPI if that's needed PH or PL

PCH strap pin:

No Reboot	Sampled at rising edge of PCH_PWROK
GSPI0_MOSI / GPP_B18	* 0 = Disable "No Reboot" mode. 1 = Enable "No Reboot" mode (PCH will disable the TCO Timer system reboot feature). This function is useful when running ITP/XDP.

The signal has a weak internal pull-down.

Memory Down Strap

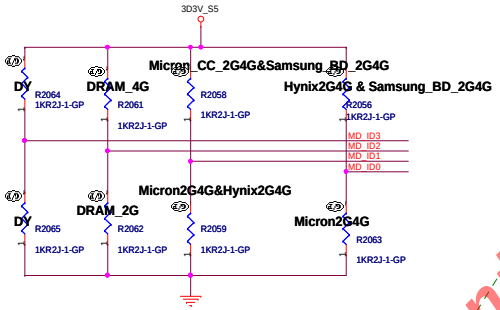

A00 20160302

RAM ID bit order is DRAM_ID2,DRAM_ID1,DRAM_ID0

Vender	RAM_ID	Wistron PN	Mfr. PN	Capacity	Freq
Micron	X000	NX80R$CB	MT41K256M16LY-107:N	2G	1600MHz
Hynix	X001	NX80R$AB	H5TC4G63CFR-PBA	2G	1600MHz
Micron	X010	NX80R$CC	MT41K256M16T	2G	1600MHz
Samsung	X011	NX80R$BD	K4B4G1646E-BYK0	2G	1600MHz
Micron	X100	NX80R$CB	MT41K256M16LY-107:N	4G	1600MHz
Hynix	X101	NX80R$AB	H5TC4G63CFR-PBA	4G	1600MHz
Micron	X110	NX80R$CC	MT41K256M16T	4G	1600MHz
Samsung	X111	NX80R$BD	K4B4G1646E-BYK0	4G	1600MHz

www.teknisi-indonesia.com

SSID = PCH

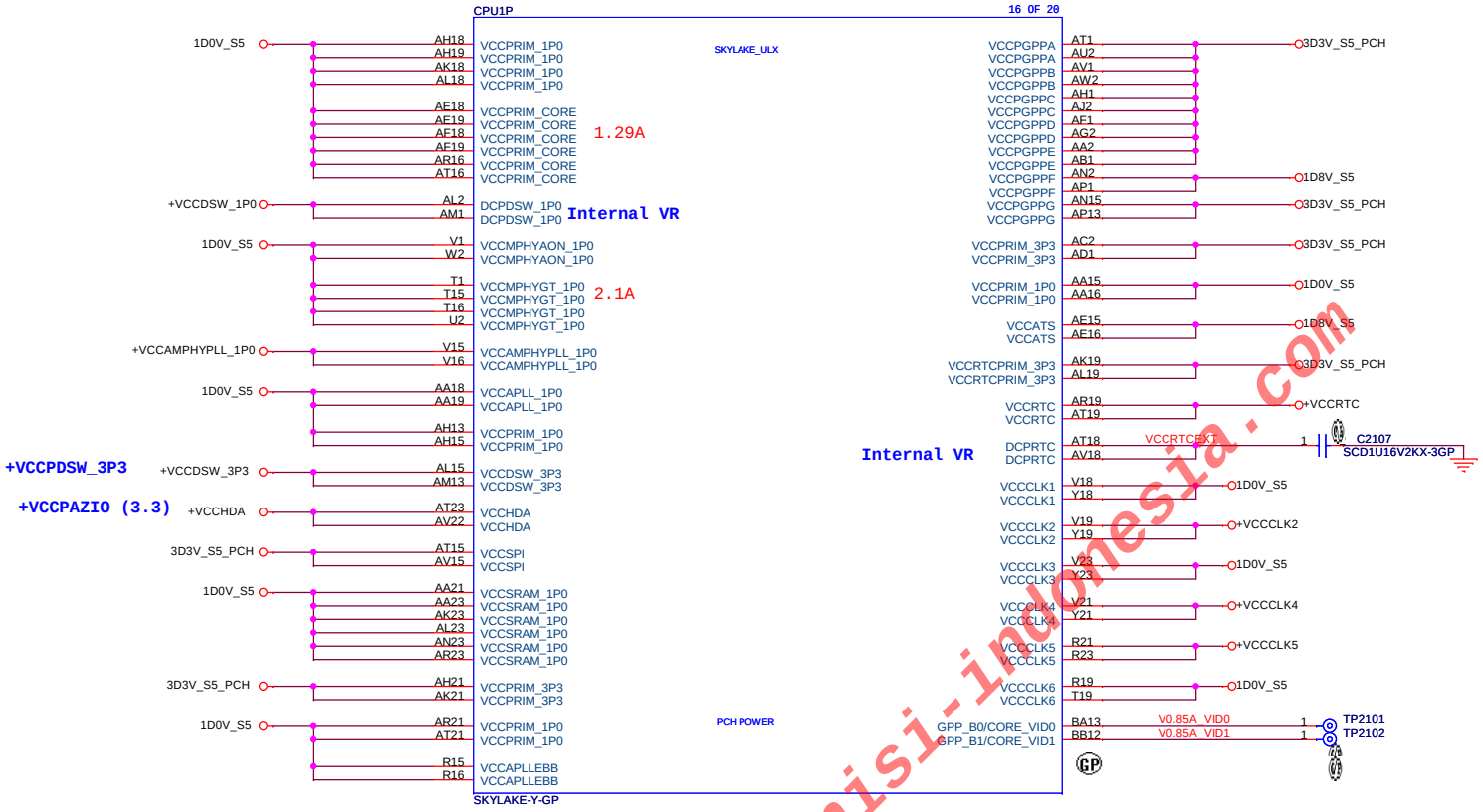

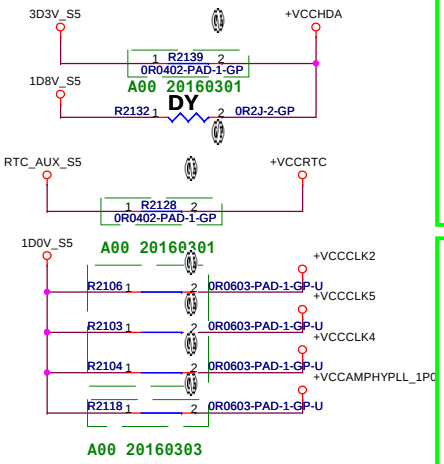

Layout Note:

D1uF:
C2102 near V1
C2103 near T1, T15
C2108 near AH13, AH15
C2110 near R15, R16
C2116 near R21
1uF:
C2104 near T1, T15
22uF:
C2105 near T1, T15

Layout Note:

D1uF:
C2128 near AK19
C2120 near AT15
C2130 near AL15
C2131 near AR19
1uF:
C2134 near AK19
C2129 near AR19
C2132 near AE15
C2133 near AL2

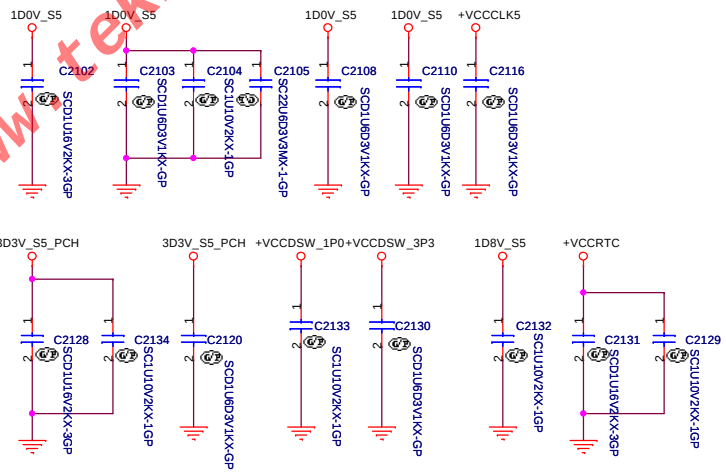

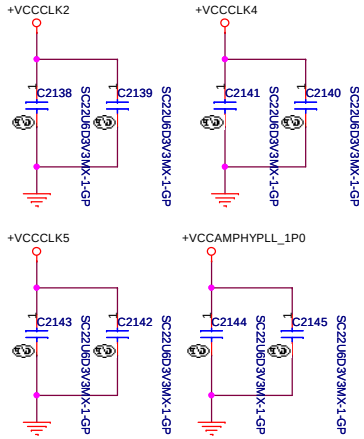

www.teknisi-indonesia.com

<Core Design>

Wistron Corporation
21F, 88, Sec.1, Hsin Tai Wu Rd., Hsichih,
Taipei Hsien 221, Taiwan, R.O.C.

Title: **PCH (POWER1)**

Size: A3 | Document Number: **Drax SKL Y** | Rev: **A00**

Date: Thursday, March 17, 2016 | Sheet 21 of 109

Blanking

www.teknisi-indonesia.com

<Core Design>
Wistron Confidential document, Anyone can not
Duplicate, Modify, Forward or any other purpose
application without get Wistron permission

Wistron Corporation
21F, 88, Sec.1, Hsin Tai Wu Rd., Hsichih,
Taipei Hsien 221, Taiwan, R.O.C.

Title	*(Reserved)*	
Size A4	Document Number Drax SKL Y	Rev A00
Date: Thursday, March 17, 2016	Sheet 22 of 109	

Blanking

www.teknisi-indonesia.com

<Core Design>

Wistron Corporation
21F, 88, Sec.1, Hsin Tai Wu Rd., Hsichih,
Taipei Hsien 221, Taiwan, R.O.C.

Title	*(Reserved)*	
Size A4	Document Number Drax SKL Y	Rev A00
Date: Thursday, March 17, 2016	Sheet 23 of 109	

SSID = KBC

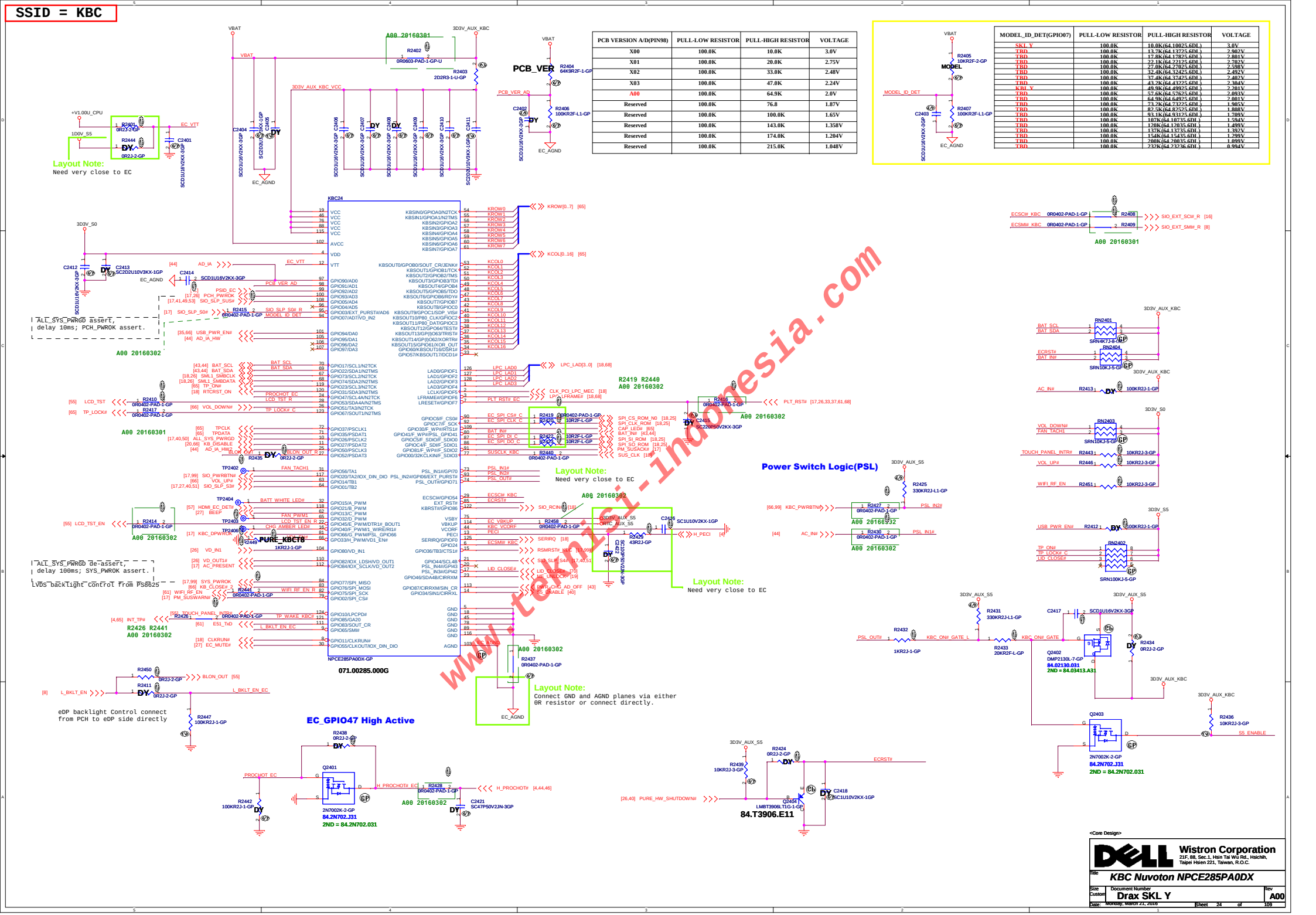

PCB VERSION A/D(PIN98)	PULL-LOW RESISTOR	PULL-HIGH RESISTOR	VOLTAGE
X00	100.0K	10.0K	3.0V
X01	100.0K	20.0K	2.75V
X02	100.0K	33.0K	2.48V
X03	100.0K	47.0K	2.24V
A00	100.0K	64.9K	2.0V
Reserved	100.0K	76.8	1.87V
Reserved	100.0K	100.0K	1.65V
Reserved	100.0K	143.0K	1.358V
Reserved	100.0K	174.0K	1.204V
Reserved	100.0K	215.0K	1.048V

MODEL_ID_DET(GPIO07)	PULL-LOW RESISTOR	PULL-HIGH RESISTOR	VOLTAGE
SKL Y	100.0K	10.0K(64.10025.6DL)	3.0V
TBD	100.0K	13.7K(64.13725.6DL)	2.902V
TBD	100.0K	17.8K(64.17825.6DL)	2.801V
TBD	100.0K	22.1K(64.22125.6DL)	2.702V
TBD	100.0K	27.0K(64.27025.6DL)	2.598V
TBD	100.0K	32.4K(64.32425.6DL)	2.492V
TBD	100.0K	37.4K(64.37425.6DL)	2.407V
TBD	100.0K	43.2K(64.43225.6DL)	2.304V
KBL Y	100.0K	49.9K(64.49925.6DL)	2.201V
TBD	100.0K	57.6K(64.57625.6DL)	2.093V
TBD	100.0K	64.9K(64.64925.6DL)	2.001V
TBD	100.0K	73.2K(64.73225.6DL)	1.905V
TBD	100.0K	82.5K(64.82525.6DL)	1.808V
TBD	100.0K	93.1K(64.93125.6DL)	1.709V
TBD	100.0K	107K(64.10735.6DL)	1.594V
TBD	100.0K	120K(64.12035.6DL)	1.499V
TBD	100.0K	137K(64.13735.6DL)	1.392V
TBD	100.0K	154K(64.15435.6DL)	1.299V
TBD	100.0K	200K(64.20035.6DL)	1.099V
TBD	100.0K	232K(64.23236.6DL)	0.984V

<Core Design>

Wistron Corporation
21F, 88, Sec.1, Hsin Tai Wu Rd., Hsichih,
Taipei Hsien 221, Taiwan, R.O.C.

Title: KBC Nuvoton NPCE285PA0DX

Size: Custom | Document Number: Drax SKL Y | Rev: A00

Date: Monday, March 21, 2016 | Sheet 24 of 109

Main Func = SPI Flash

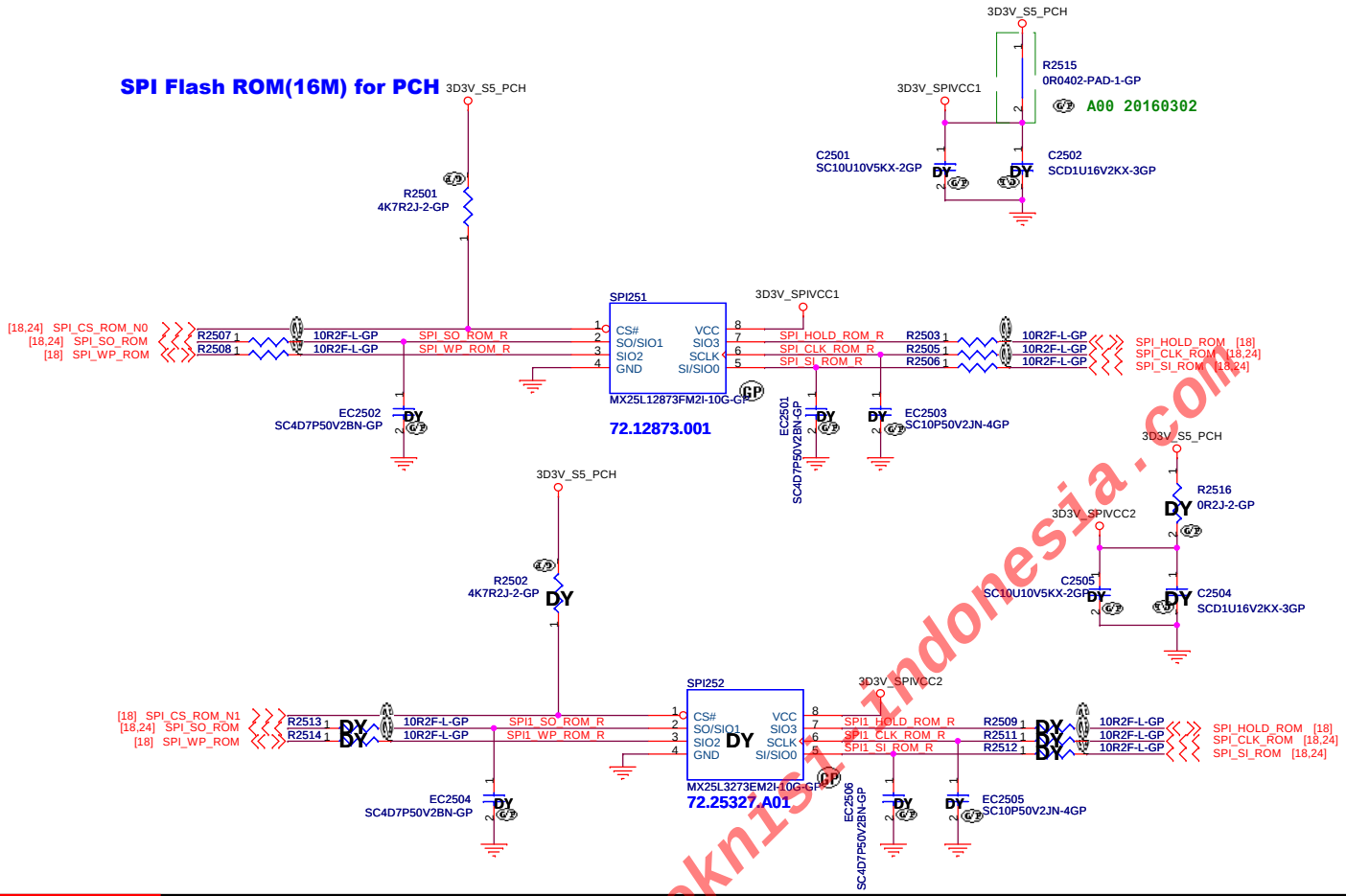

Main Func = RTC

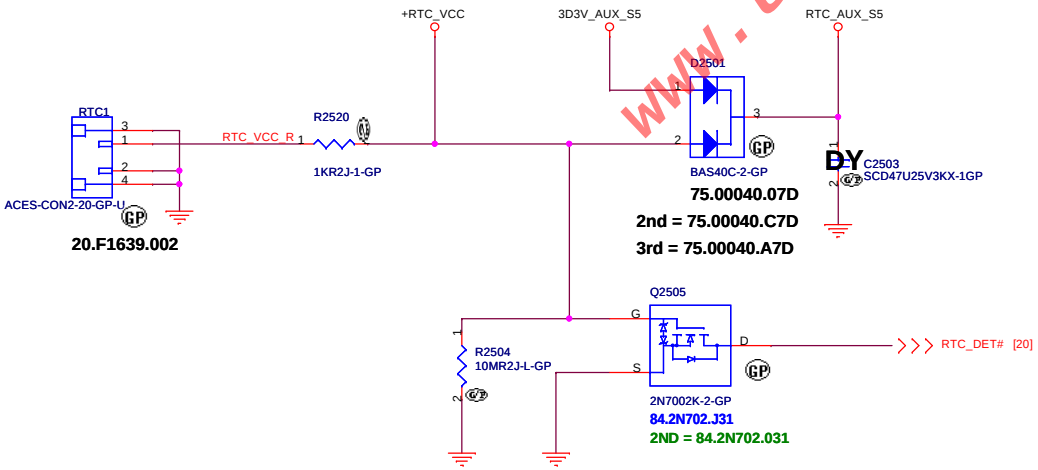

www.teknisi-indonesia.com

<Core Design>

Wistron Corporation
21F, 88, Sec.1, Hsin Tai Wu Rd., Hsichih,
Taipei Hsien 221, Taiwan, R.O.C.

Title: Flash/RTC

Size: A3 | Document Number: Drax SKL Y | Rev: A00

Date: Monday, March 21, 2016 | Sheet 25 of 109

SSID = Thermal Sensor

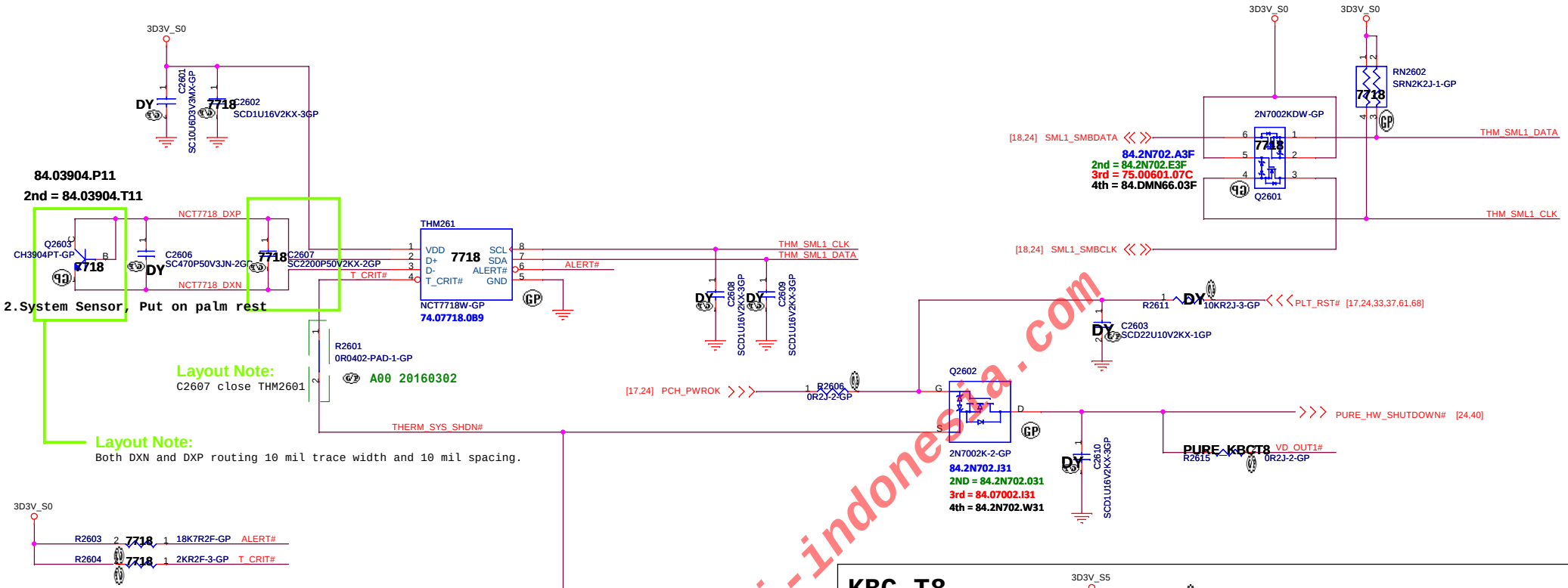

The default value is trapping after power up 100ms by different pull-up resistors of T_CRIT# and ALERT# pin:

TEMPERATURE (℃)		T_CRIT#				
		2KΩ	7.5KΩ	10.5KΩ	14KΩ	18.7KΩ
ALERT#	2KΩ	77	87	97	107	117
	7.5KΩ	79	89	99	109	119
	10.5KΩ	81	91	101	111	121
	14KΩ	83	93	103	113	123
	18.7KΩ	85	95	105	115	125

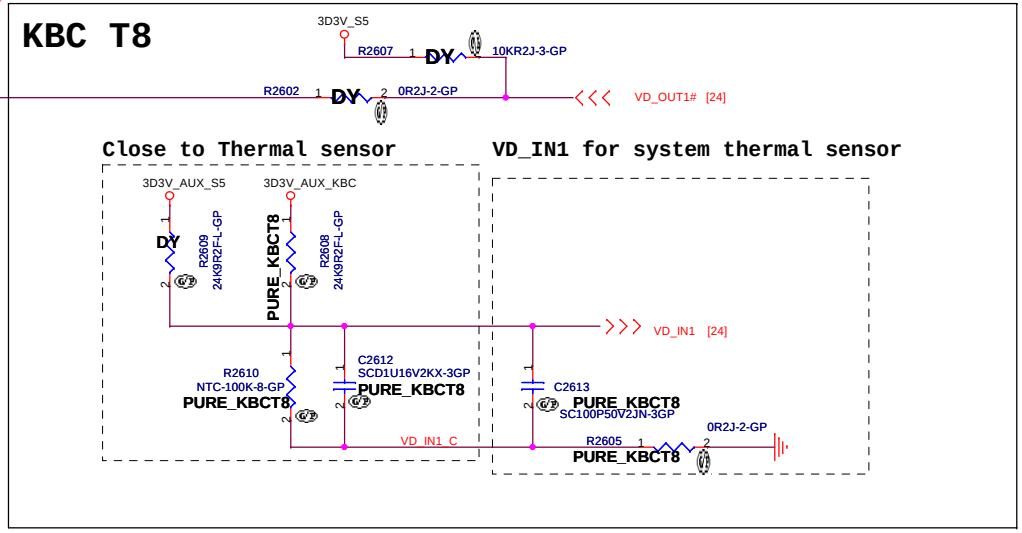

www.teknisi-indonesia.com

<Core Design>

Wistron Corporation
21F, 88, Sec.1, Hsin Tai Wu Rd., Hsichih,
Taipei Hsien 221, Taiwan, R.O.C.

Title: THERMAL NCT7718W/Fan

Size: A3 | Document Number: Drax SKL Y | Rev: A00

Date: Monday, March 21, 2016 | Sheet 26 of 109

SSID = Audio

Audio Codec Chip ALC3246

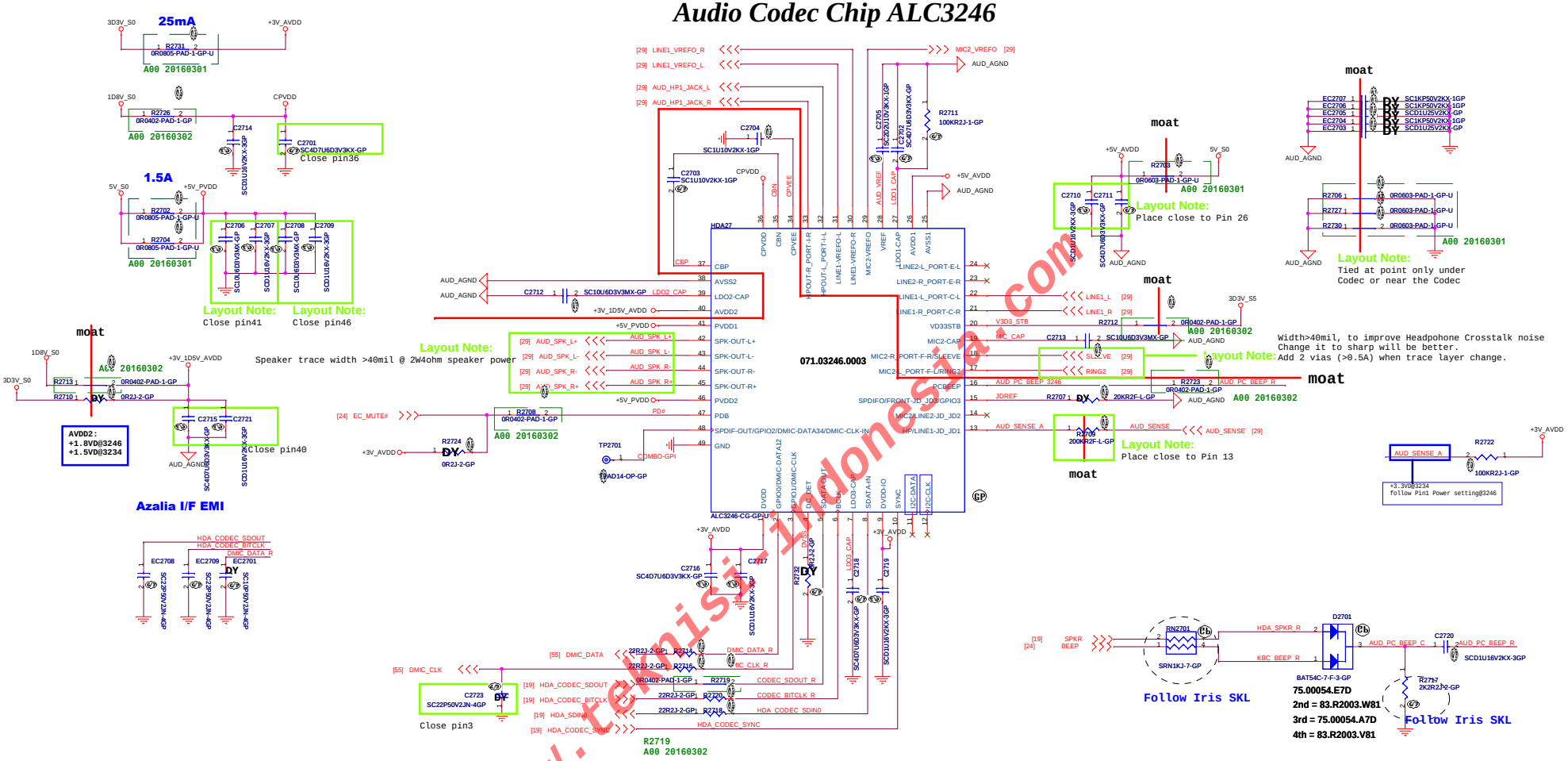

Power requirement:
DVDD must >=DVDD_IO

+3.3V_1.8V_DVDD	+3.3V_1.8V_DVDD_IO	Result
3.3V+/-10%	3.3V+/-10%	support
3.3V+/-10%	1.8V+/-5%	support
1.8V+/-5%	1.8V+/-5%	support
1.8V+/-5%	1.5V+/-5%	support
1.8V+/-5%	3.3V+/-10%	Not support

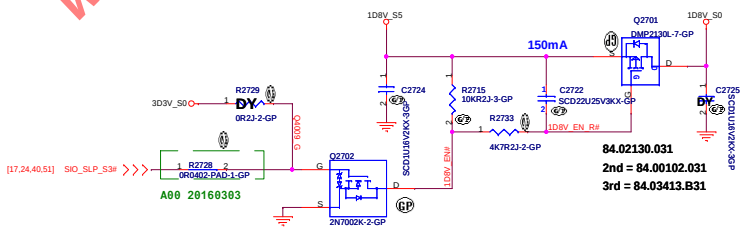

www.renisi-indonesia.com

Wistron Corporation
21F, 88, Sec.1, Hsin Tai Wu Rd., Hsichih,
Taipei Hsien 221, Taiwan, R.O.C.

Title: Audio Codec ALC3246
Size: A2
Document Number: Drax SKL Y
Rev: A00
Date: Tuesday, March 22, 2016
Sheet 27 of 109

Blanking

www.teknisi-indonesia.com

<Core Design>

Wistron Corporation
21F, 88, Sec.1, Hsin Tai Wu Rd., Hsichih,
Taipei Hsien 221, Taiwan, R.O.C.

Title	(Reserved)	
Size A4	Document Number Drax SKL Y	Rev A00
Date: Thursday, March 17, 2016	Sheet 28 of 109	

SSID = Audio

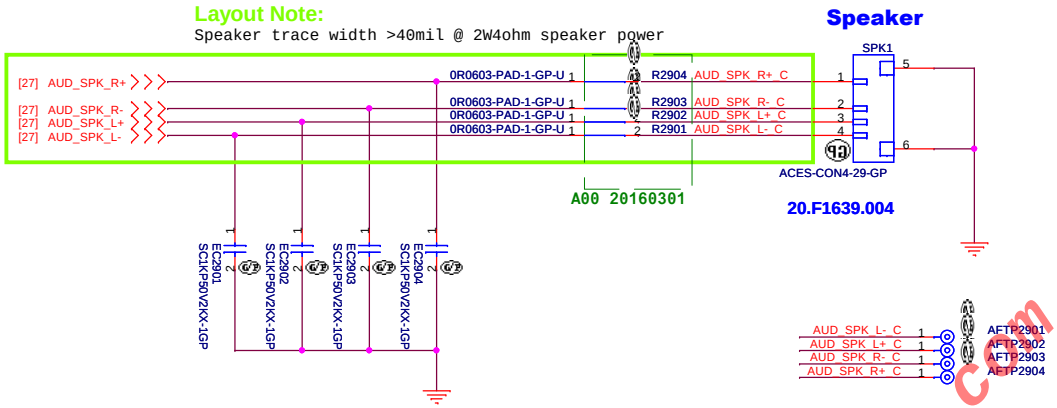

CONN Pin	Net name
Pin1	SPK_R+
Pin2	SPK_R-
Pin3	SPK_L+
Pin4	SPK_L-

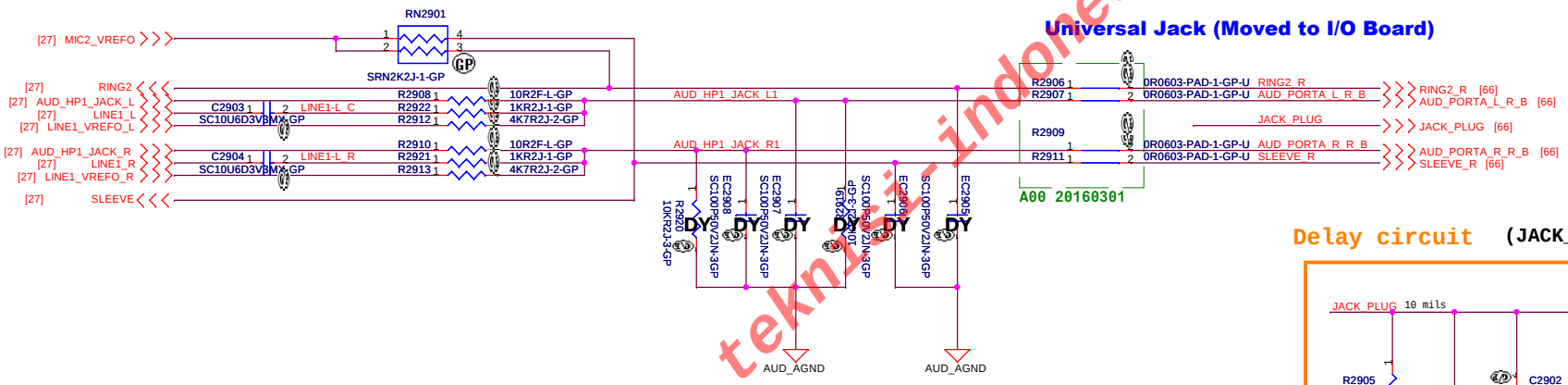

www.teknisi-indonesia.com

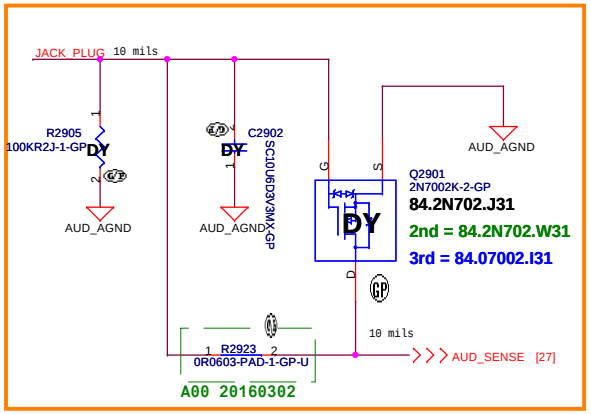

<Core Design>

Wistron Corporation
21F, 88, Sec.1, Hsin Tai Wu Rd., Hsichih,
Taipei Hsien 221, Taiwan, R.O.C.

Title		
	Audio IO	
Size A3	Document Number: Drax SKL Y	Rev A00
Date: Monday, March 21, 2016	Sheet 29 of 109	

Blanking

www.teknisi-indonesia.com

<Core Design>

Wistron Corporation
21F, 88, Sec.1, Hsin Tai Wu Rd., Hsichih,
Taipei Hsien 221, Taiwan, R.O.C.

Title	(Reserved)	
Size A4	Document Number Drax SKL Y	Rev A00
Date: Monday, March 21, 2016	Sheet 30 of 109	

Blanking

www.teknisi-indonesia.com

<Core Design>

Wistron Corporation
21F, 88, Sec.1, Hsin Tai Wu Rd., Hsichih,
Taipei Hsien 221, Taiwan, R.O.C.

Title	*(Reserved)*	
Size A4	Document Number **Drax SKL Y**	Rev **A00**
Date: Monday, March 21, 2016	Sheet 31 of 109	

Blanking

www.teknisi-indonesia.com

<Core Design>

Wistron Corporation
21F, 88, Sec.1, Hsin Tai Wu Rd., Hsichih,
Taipei Hsien 221, Taiwan, R.O.C.

Title	***(Reserved)***	
Size A4	Document Number ***Drax SKL Y***	Rev ***A00***
Date: Monday, March 21, 2016	Sheet 32 of 109	

SSID = Card Reader

Card Reader IC (PCIE Interface)

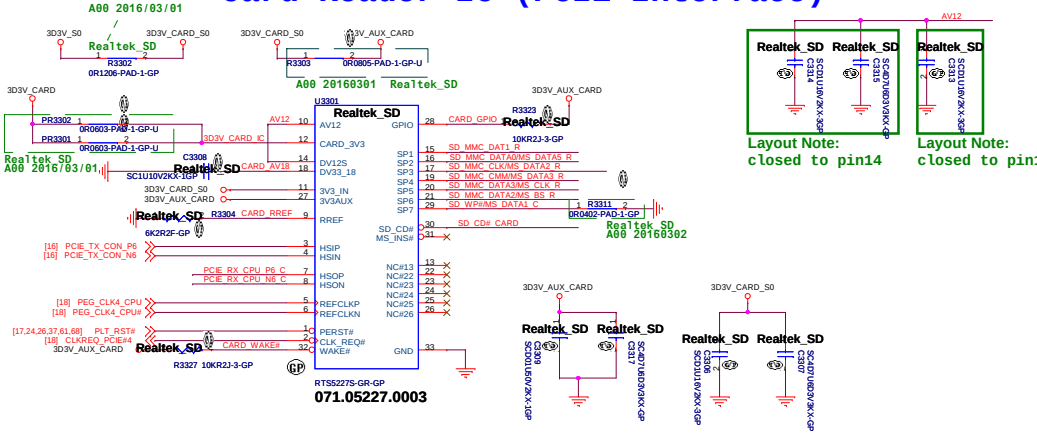

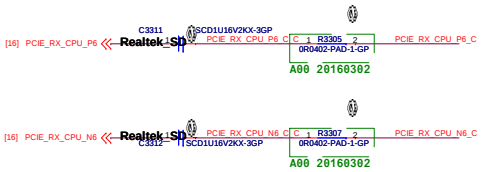

Pin name	Net name
SD_DAT1	SD_MMC_DAT1
SP1	SD Data 1
SP2	SD_Data_0/MS_Data_1
SP3	SD_Clock_signal/MS_Data_0
SP4	SD_CMD_signal /MS_Data_2
SP5	SD_Data_3/MS_Data_3
SP6	SD_Data_2 /MS_Clock_signal
SP7	SD_WP_signal/MS_BS_signal

Card Reader Power SW (CPU Only)

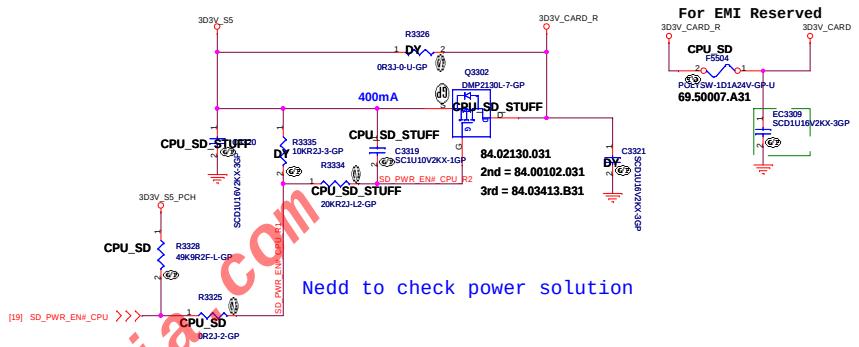

SD Card Connector

Pin	Define
P1	SWITCH TERM CD
P2	DAT1
P3	DAT0
P4	VSS
P5	CLK
P6	VDD
P7	CMD
P8	CD/DAT3
P9	DAT2
P10	GND
P11	GND

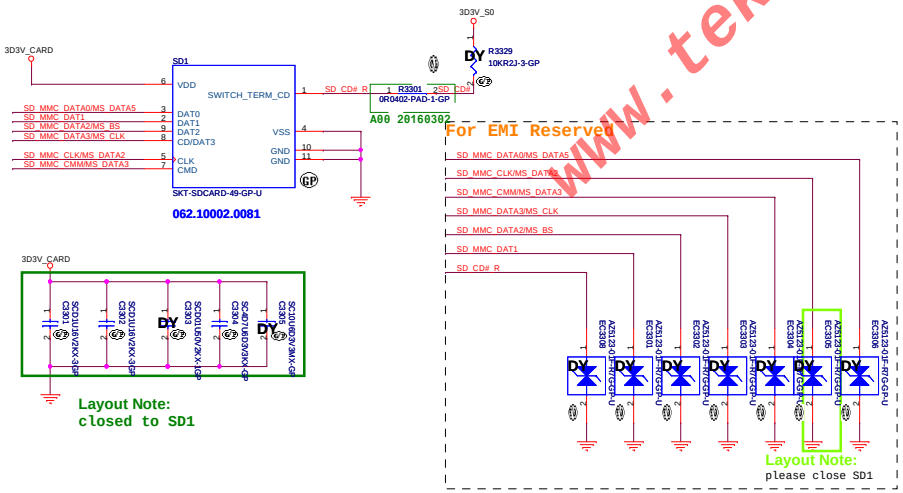

Co-lay from CPU and Card Reader IC

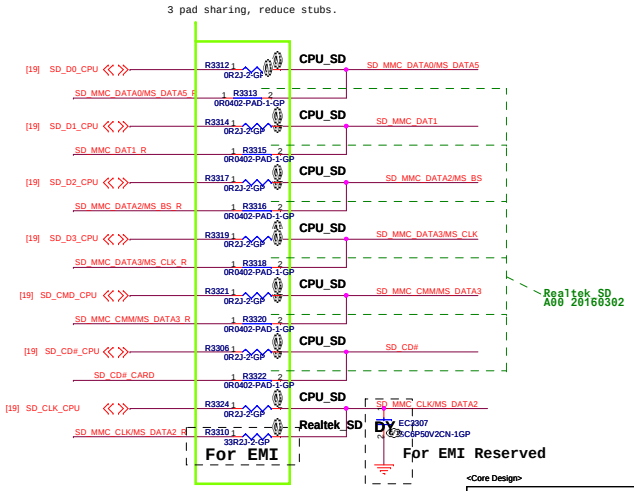

www.teknisi-indonesia.com

Blanking

www.teknisi-indonesia.com

<Core Design>

Wistron Corporation
21F, 88, Sec.1, Hsin Tai Wu Rd., Hsichih,
Taipei Hsien 221, Taiwan, R.O.C.

Title	*(Reserved)*	
Size A4	Document Number *Drax SKL Y*	Rev *A00*
Date: Monday, March 21, 2016	Sheet 34 of 109	

SSID = USB

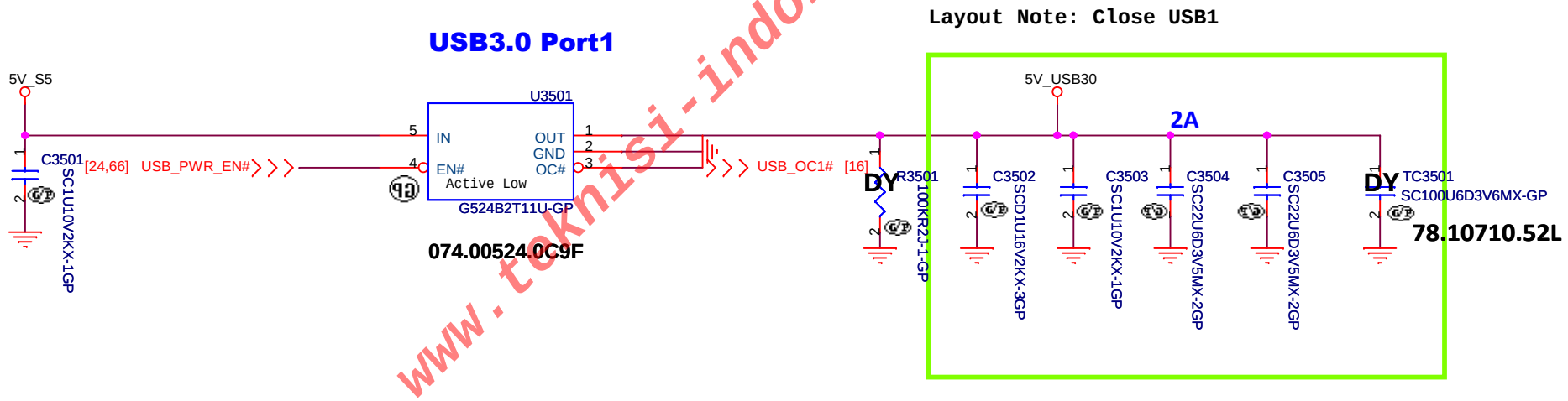

www.teknisi-indonesia.com

<Core Design>

Wistron Corporation
21F, 88, Sec.1, Hsin Tai Wu Rd., Hsichih,
Taipei Hsien 221, Taiwan, R.O.C.

Title	USB Power SW	
Size A4	Document Number Drax SKL Y	Rev A00
Date: Monday, March 21, 2016	Sheet 35 of 109	

SSID = USB

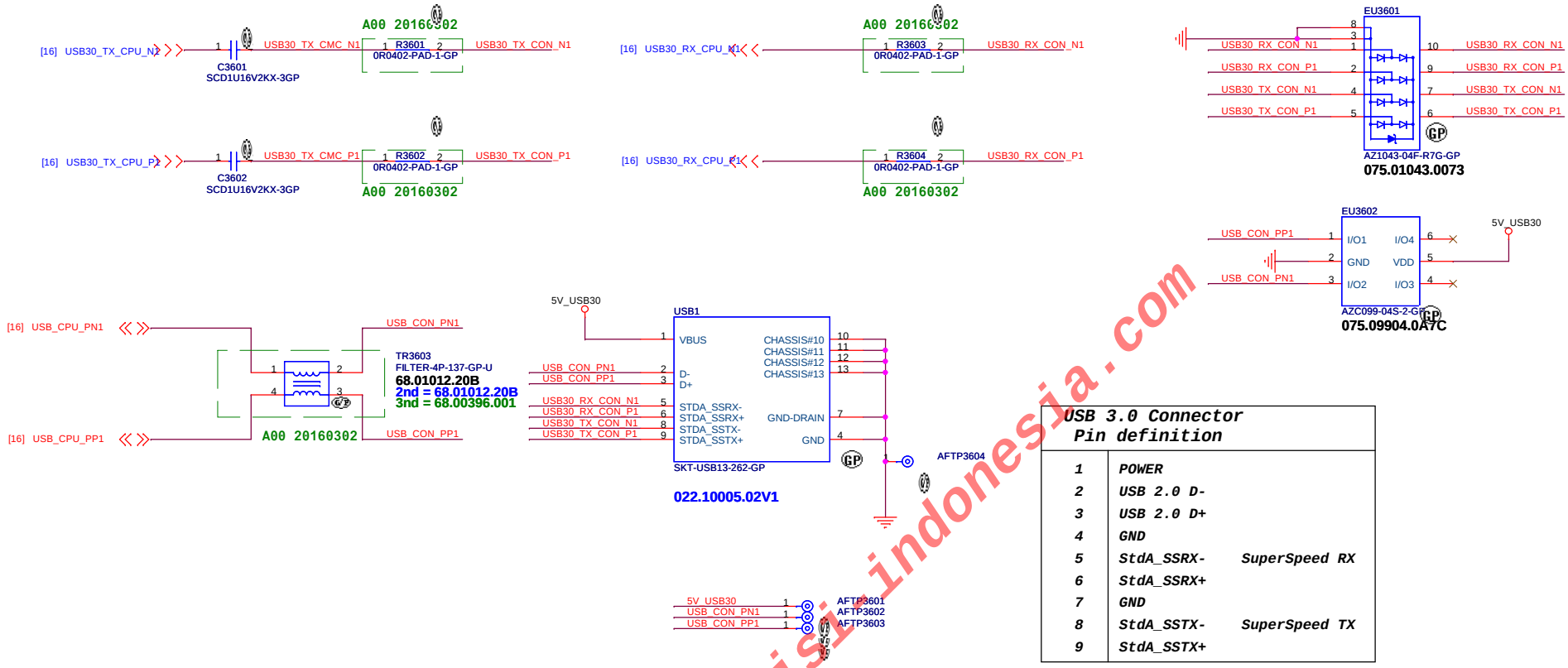

USB 3.0 Connector Pin definition		
1	POWER	
2	USB 2.0 D-	
3	USB 2.0 D+	
4	GND	
5	StdA_SSRX-	SuperSpeed RX
6	StdA_SSRX+	
7	GND	
8	StdA_SSTX-	SuperSpeed TX
9	StdA_SSTX+	

www.teknisi-indonesia.com

<Core Design>

Wistron Corporation
21F, 88, Sec.1, Hsin Tai Wu Rd., Hsichih,
Taipei Hsien 221, Taiwan, R.O.C.

Title: **USB3.0 CONN**

Size | Document Number: **Drax SKL Y** | Rev: **A00**

Date: Tuesday, March 22, 2016 | Sheet 36 of 109

SSID = USB

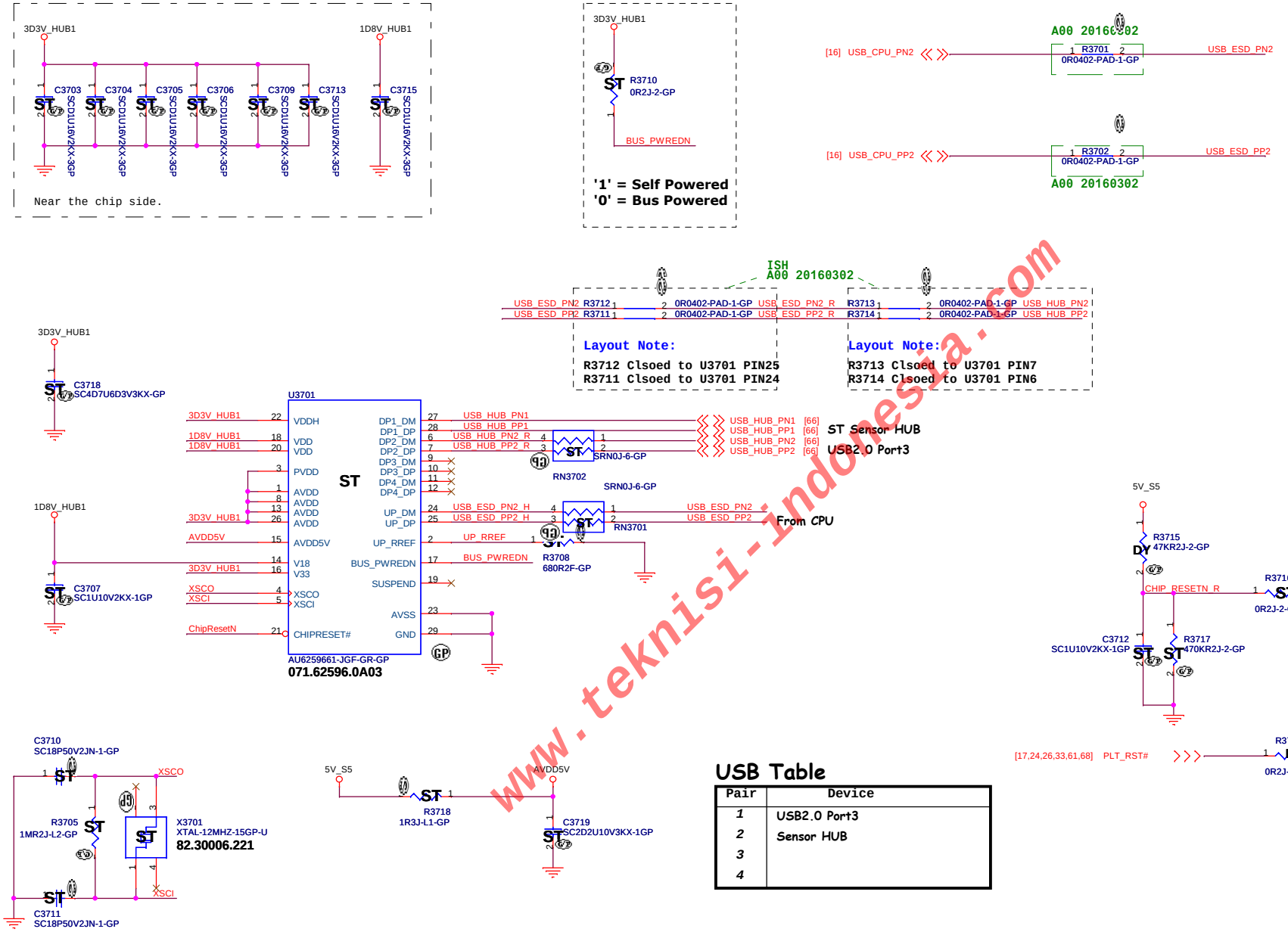

USB Table

Pair	Device
1	USB2.0 Port3
2	Sensor HUB
3	
4	

www.teknisi-indonesia.com

<Core Design>

Wistron Corporation
21F, 88, Sec.1, Hsin Tai Wu Rd., Hsichih,
Taipei Hsien 221, Taiwan, R.O.C.

Title: USB2.0 HUB

Size: A3 | Document Number: Drax SKL Y | Rev: A00

Date: Thursday, March 17, 2016 | Sheet 37 of 109

Blanking

www.teknisi-indonesia.com

<Core Design>

Wistron Corporation
21F, 88, Sec.1, Hsin Tai Wu Rd., Hsichih,
Taipei Hsien 221, Taiwan, R.O.C.

Title: (Reserved)

Size	Document Number	Rev
A4	Drax SKL Y	A00

Date: Thursday, March 17, 2016 Sheet 38 of 109

Blanking

www.teknisi-indonesia.com

<Core Design>

Wistron Corporation
21F, 88, Sec.1, Hsin Tai Wu Rd., Hsichih,
Taipei Hsien 221, Taiwan, R.O.C.

Title

(Reserved)

Size	Document Number	Rev
A4	***Drax SKL Y***	***A00***

Date: Thursday, March 17, 2016 Sheet 39 of 109

SSID= Power Plane & Sequence

ROSA Run Power

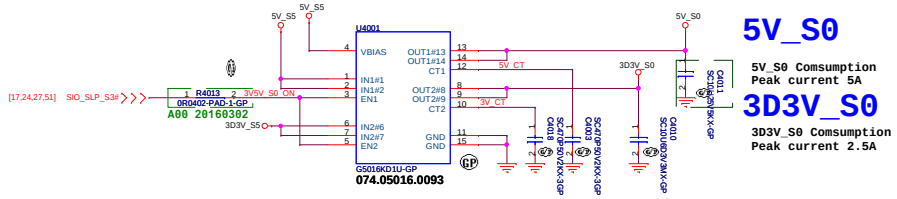

5V_S0

5V_S0 Comsumption
Peak current 5A

3D3V_S0

3D3V_S0 Comsumption
Peak current 2.5A

Power Good

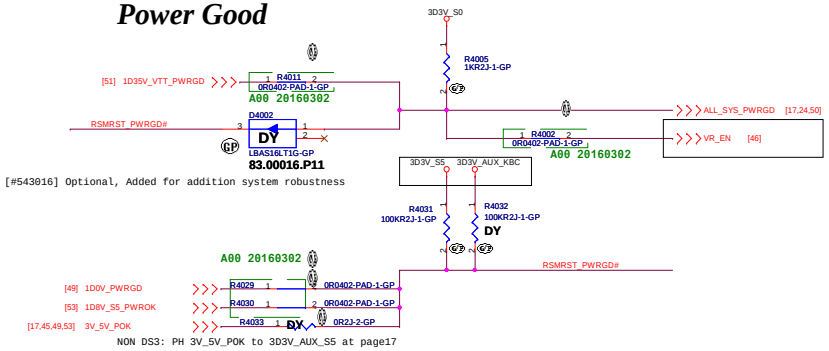

VCCIO and VCCSTG

Modify power switch IC and relate schematic
DVT2 2016/01/21

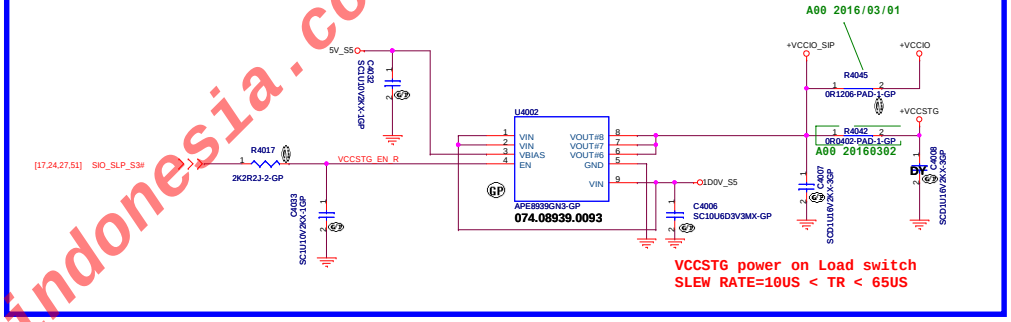

ALL SYS PWRGD

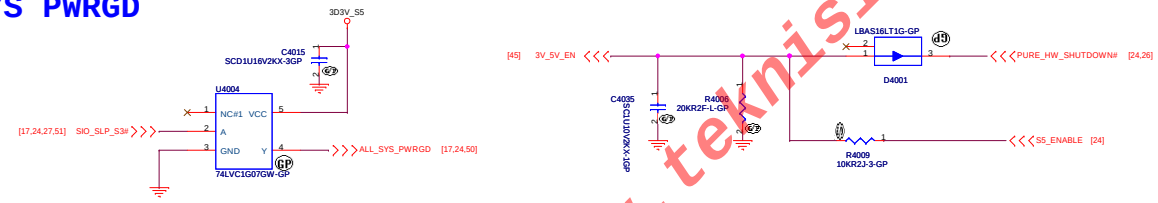

MANAGEMENT RAIL POWER GENERATION

VCCST, VCCSTG, and VCCPLL can remain powered during S4 and S5 power states for board VR optimization.

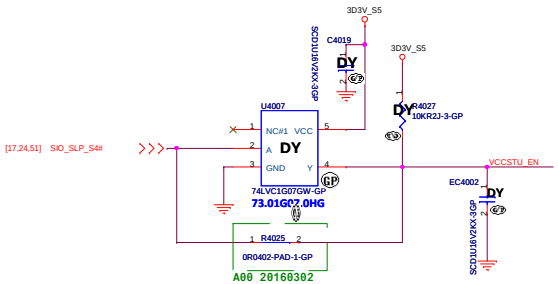

VCCST

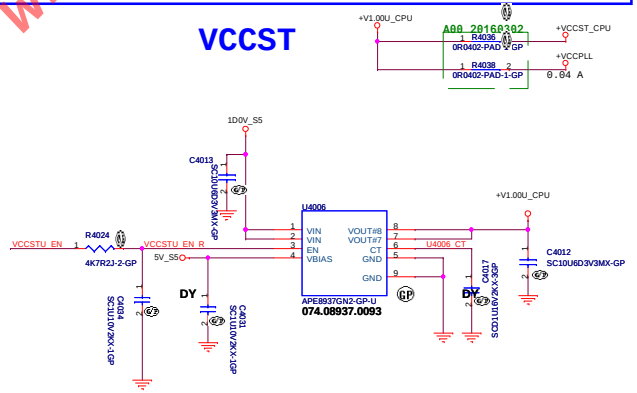

www.teknisi-indonesia.com

<Core Design>
Wistron Corporation
21F, 88, Sec.1, Hsin Tai Wu Rd., Hsichih,
Taipei Hsien 221, Taiwan, R.O.C.

Title: Power Plane Enable

Size	Document Number	Rev
A2	Drax SKL Y	A00

Date: Tuesday, March 22, 2016 Sheet 40 of 109

SSID = DS3

Reserve by NON DS3 function 20150413

DS3

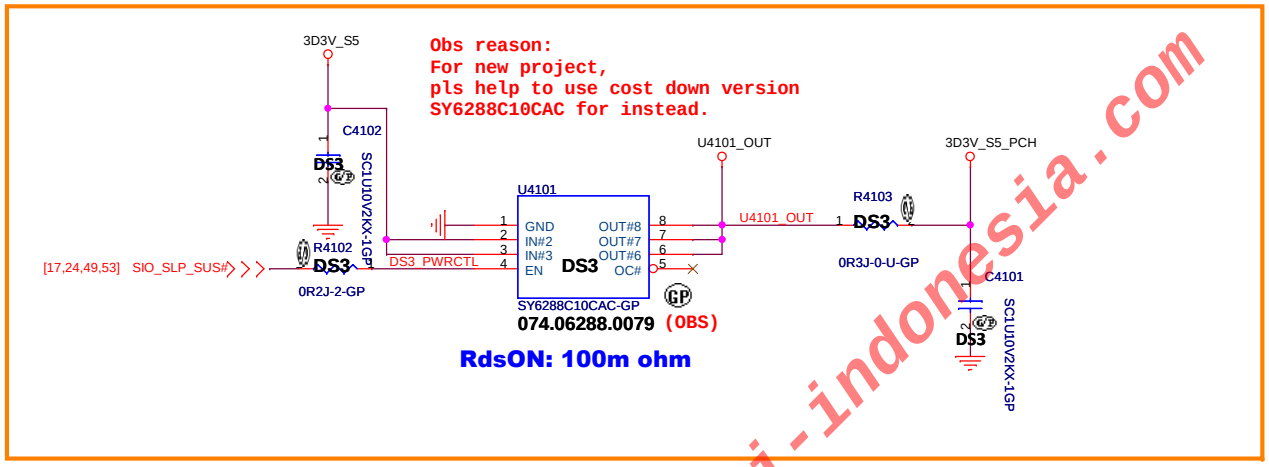

DS3

www.teknisi-indonesia.com

<Core Design>

Wistron Corporation
21F, 88, Sec.1, Hsin Tai Wu Rd., Hsichih,
Taipei Hsien 221, Taiwan, R.O.C.

Title	DS3	
Size B	Document Number Drax SKL Y	Rev A00
Date: Monday, March 21, 2016	Sheet 41 of 109	

SSID = DIMM1

VREF CIRCUITRY

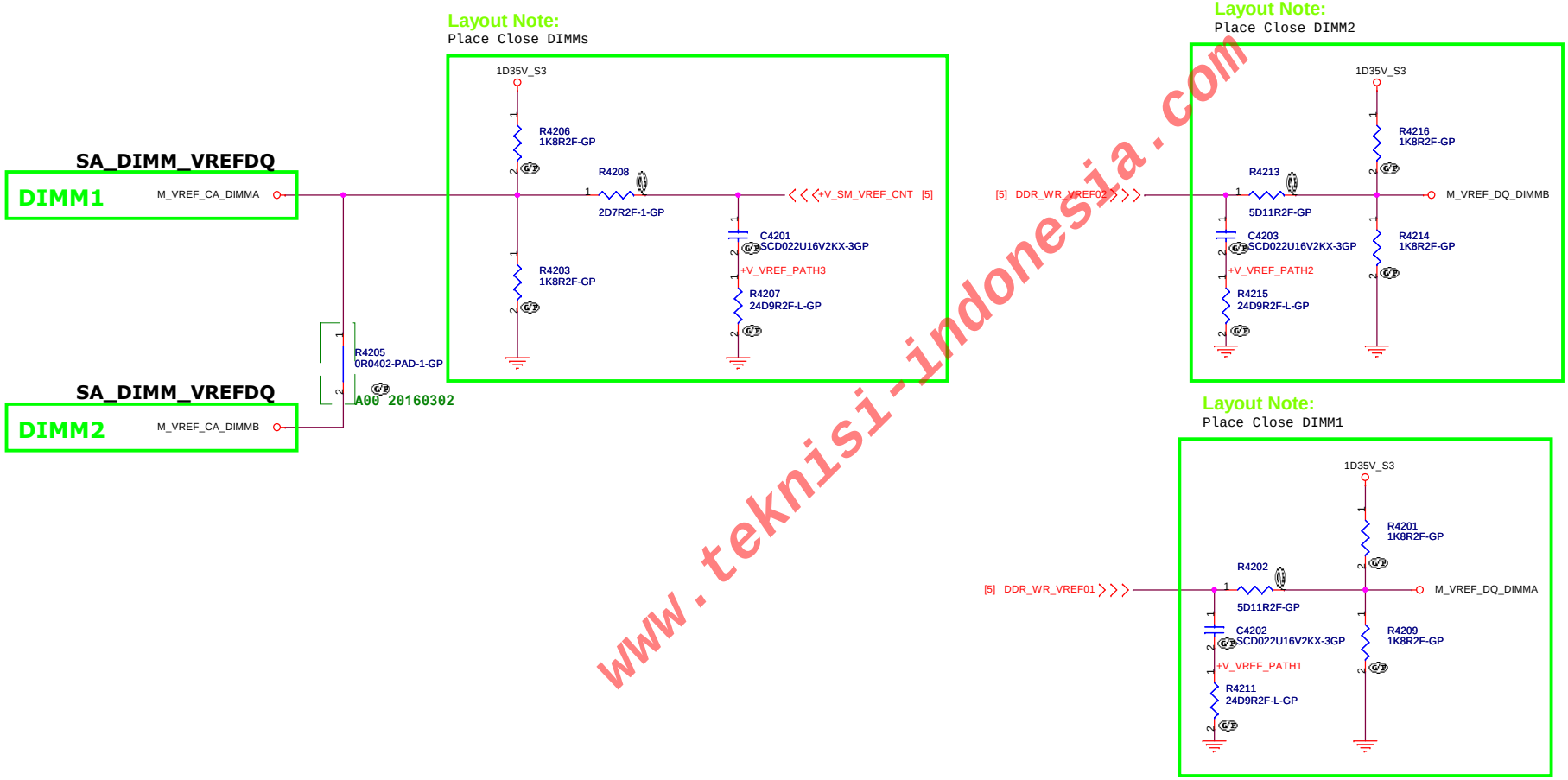

www.teknisi-indonesia.com

<Core Design>

Wistron Corporation
21F, 88, Sec.1, Hsin Tai Wu Rd., Hsichih,
Taipei Hsien 221, Taiwan, R.O.C.

Title: DIMM1 POWER

Size: A3 | Document Number: Drax SKL Y | Rev: A00

Date: Monday, March 21, 2016 | Sheet 42 of 109

SSID = PWR.Support

Pin Definition: TBD

Layout Note:
PSID Layout width > 25mil

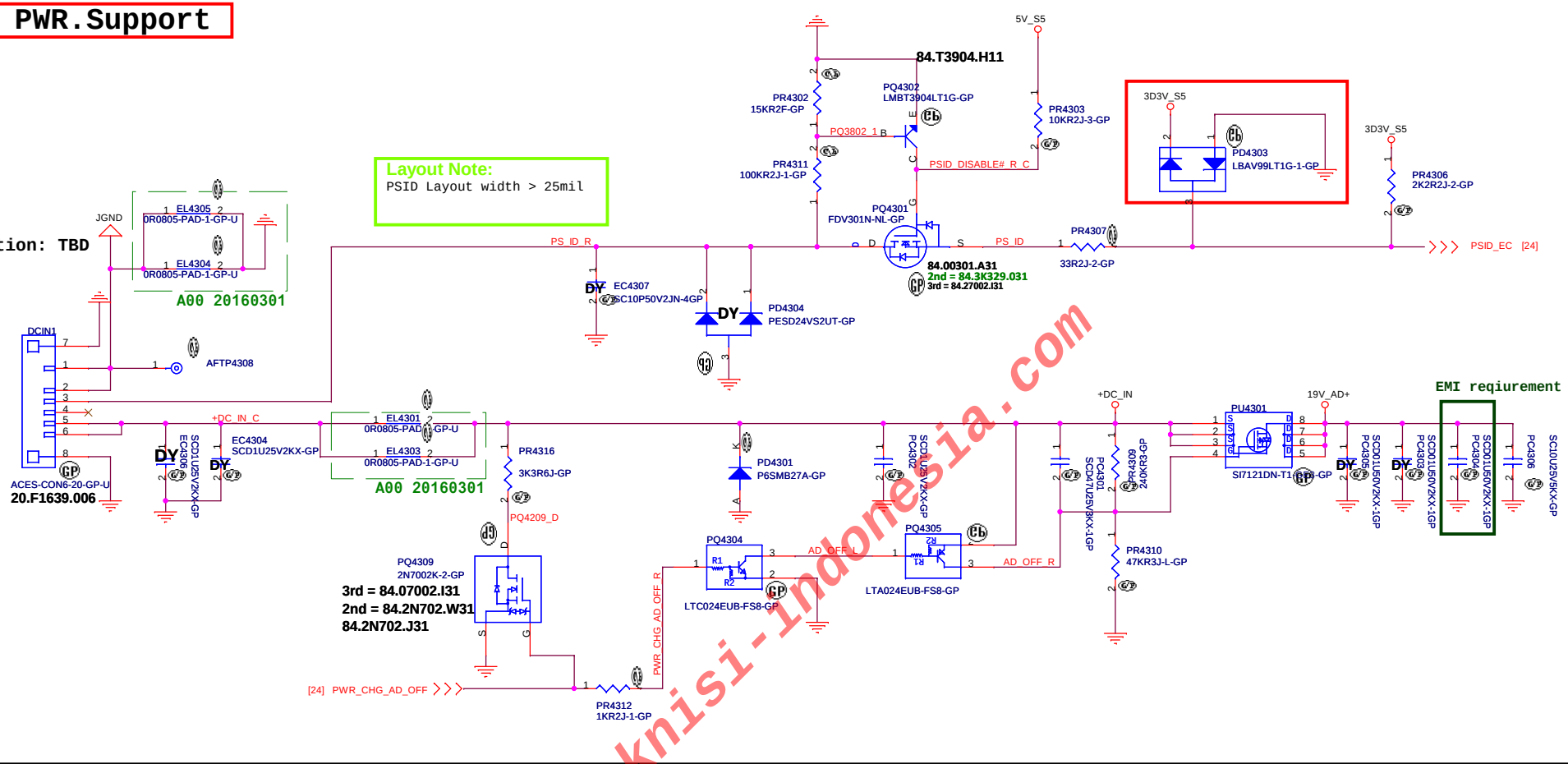

SSID = PWR.Support

Placement: Close to Batt Connector

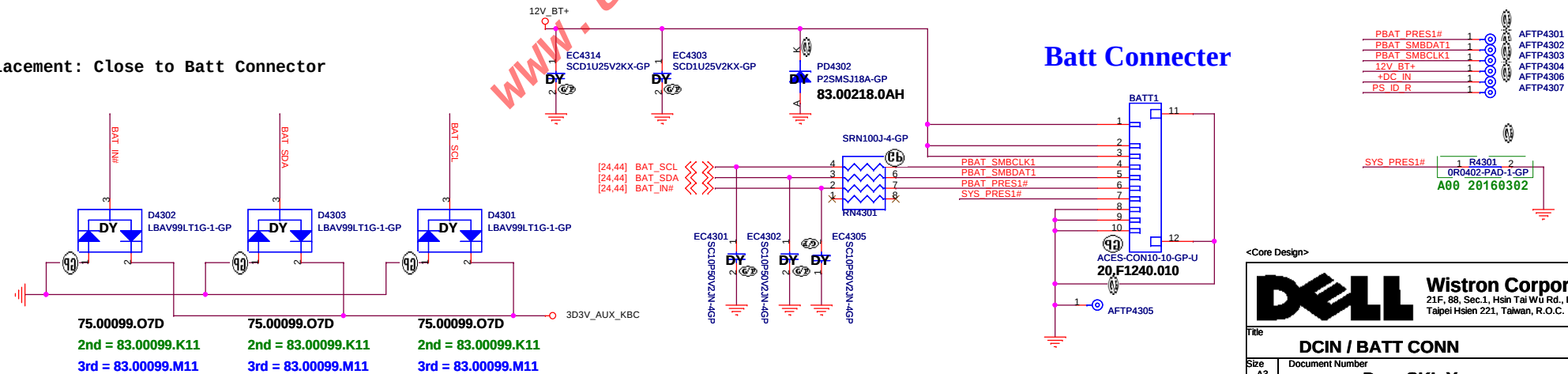

www.teknisi-indonesia.com

<Core Design>

Wistron Corporation
21F, 88, Sec.1, Hsin Tai Wu Rd., Hsichih,
Taipei Hsien 221, Taiwan, R.O.C.

Title	DCIN / BATT CONN	
Size A3	Document Number Drax SKL Y	Rev A00
Date: Monday, March 21, 2016	Sheet 43 of 109	

SSID = Charger

BT Cell	4 Cells	3 Cells	2 Cells
PR4407	309K ohm	287K ohm	287K ohm
PR4431	47K ohm	47K ohm	47K ohm
ACDET	18.178V	17.055V	17.055V

EC code only BQ24727

H_PROCHOT#	AD_IA_HW	AD_IA_HW2
35W	0	0
45W	1	0
65W	0	1

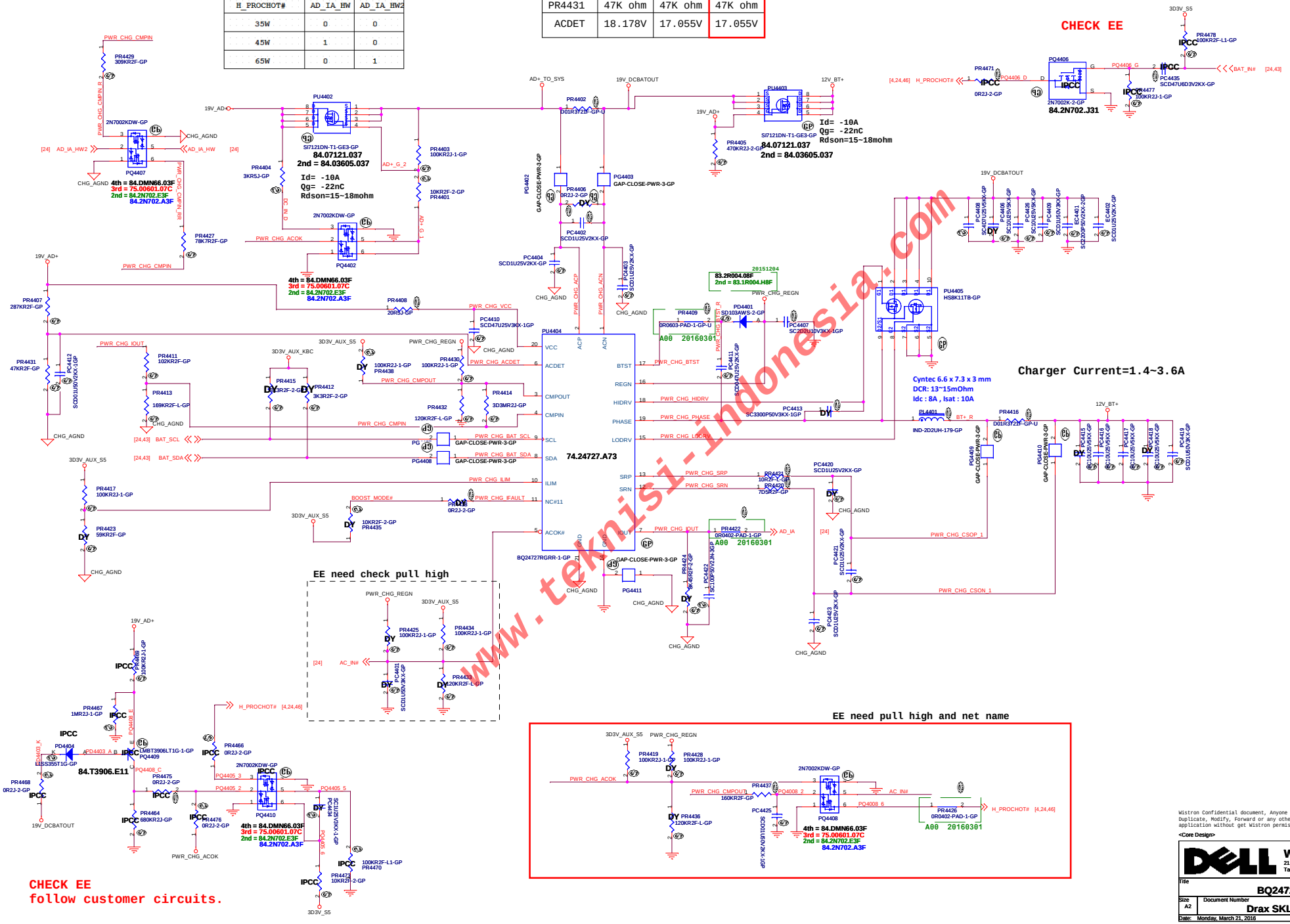

www.teknisi-indonesia.com

Wistron Confidential document, Anyone can not Duplicate, Modify, Forward or any other purpose application without get Wistron permission

<Core Design>

Wistron Corporation
21F, 88, Sec.1, Hsin Tai Wu Rd., Hsichih, Taipei Hsien 221, Taiwan, R.O.C.

Title: BQ24727_CHARGER

Size: A2 | Document Number: Drax SKL Y | Rev: A00

Date: Monday, March 21, 2016 | Sheet 44 of 109

SSID = Charger

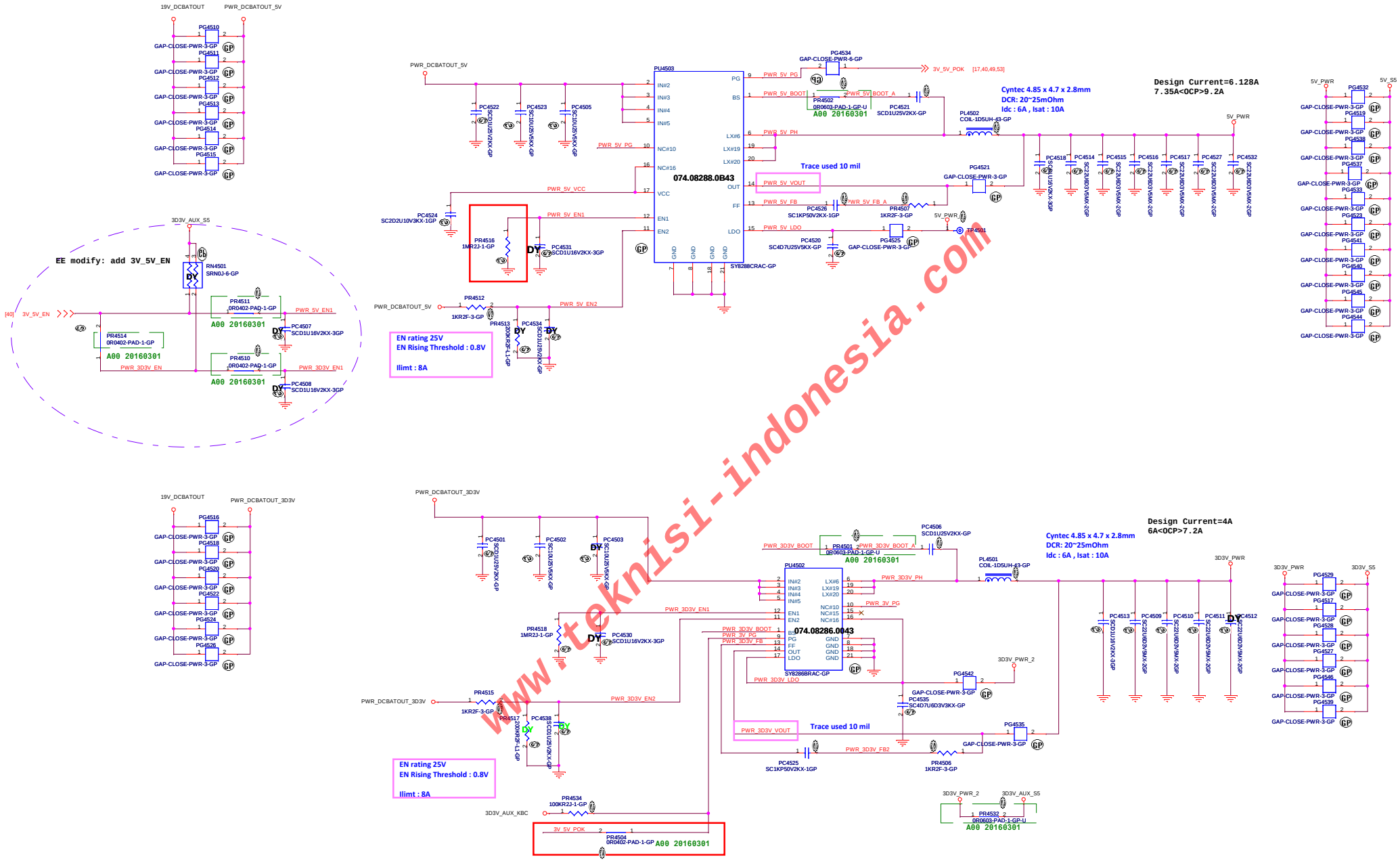

www.teknisi-indonesia.com

Main Func = CPU_CORE

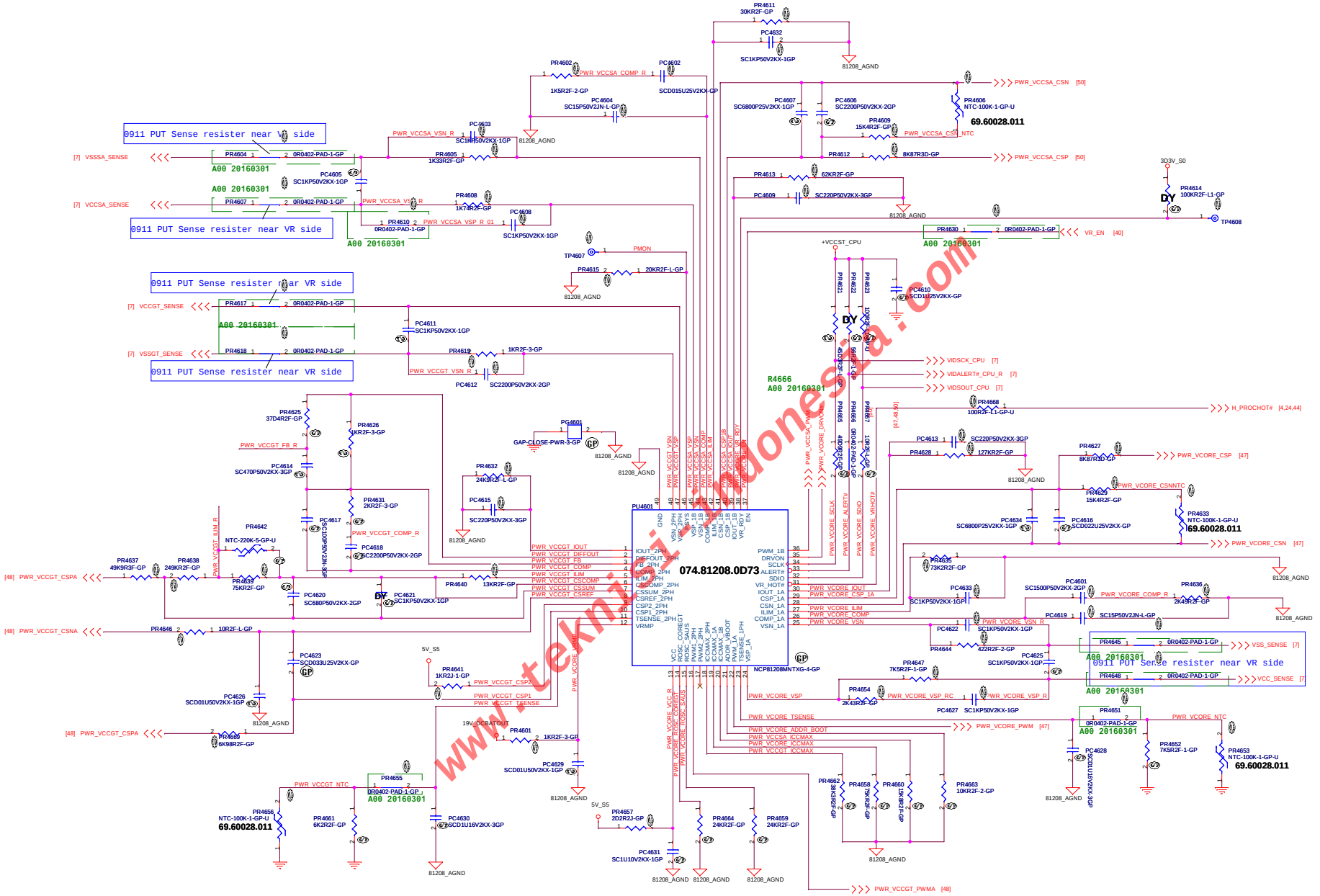

www.teknisi-indonesia.com

<Core Design>

Wistron Corporation
21F, 88, Sec.1, Hsin Tai Wu Rd., Hsichih,
Taipei Hsien 221, Taiwan, R.O.C.

Title: NCP81201MNTXG_CPUCORE(1/3)

Size: A2 | Document Number: Drax SKL Y | Rev: A00

Date: Tuesday, March 22, 2016 | Sheet 46 of 109

Main Func = CPU_CORE

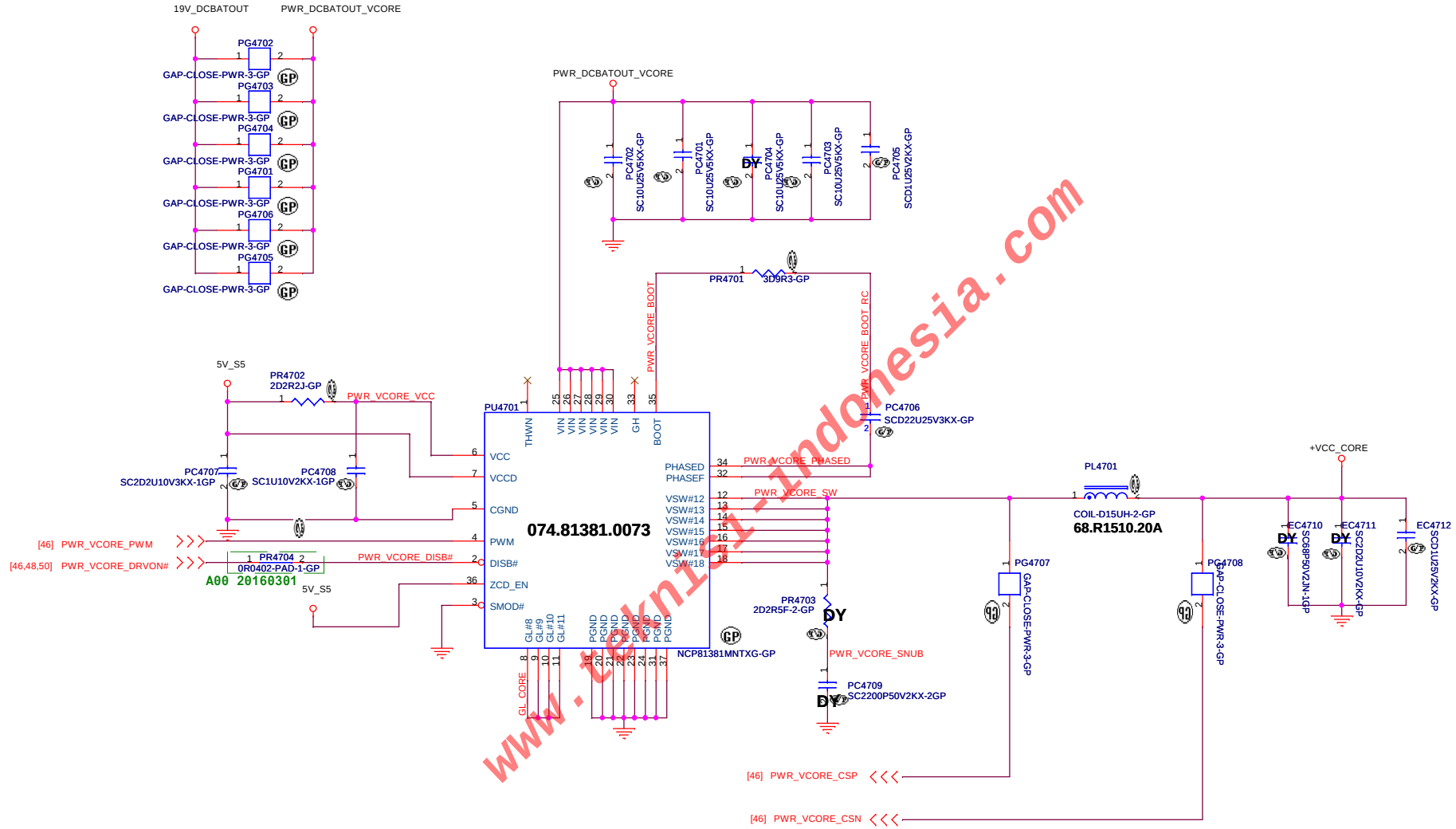

www.teknisi-Indonesia.com

<Core Design>

Wistron Corporation
21F, 88, Sec.1, Hsin Tai Wu Rd., Hsichih,
Taipei Hsien 221, Taiwan, R.O.C.

Title: NCP81201MNTXG CPUCORE(2/3)

Size: A3 | Document Number: Drax SKL Y | Rev: A00

Date: Tuesday, March 22, 2016 | Sheet 47 of 109

Main Func = CPU_CORE

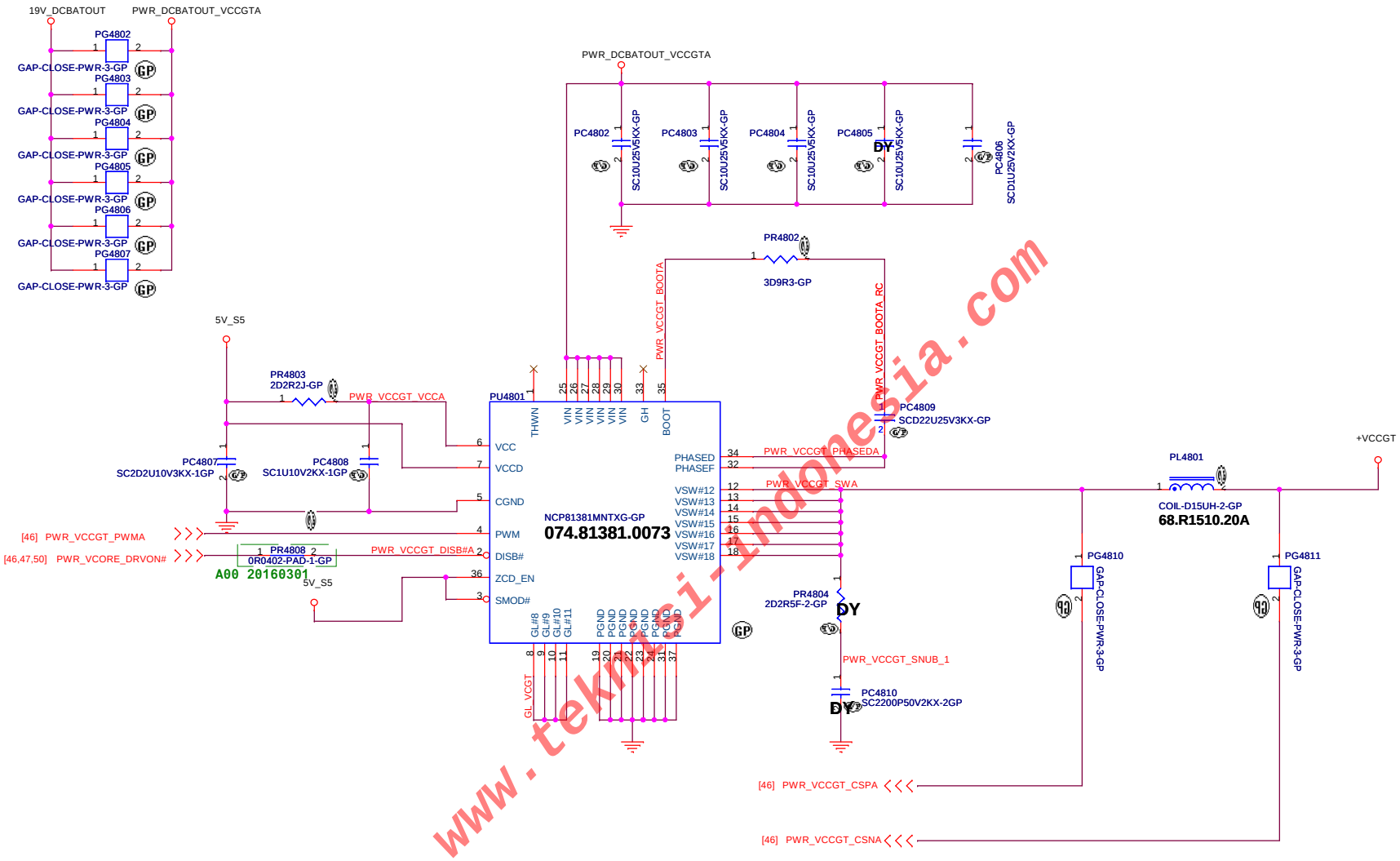

www.teknisi-indonesia.com

<Core Design>

Wistron Corporation
21F, 88, Sec.1, Hsin Tai Wu Rd., Hsichih,
Taipei Hsien 221, Taiwan, R.O.C.

Title: NCP81201MNTXG_GFXCORE(3/3)

Size: A3 | Document Number: Drax SKL Y | Rev: A00

Date: Thursday, March 17, 2016 | Sheet 48 of 109

SSID = PWR.Plane.Regulator_1p0v

SY8288RAC for 1D0V

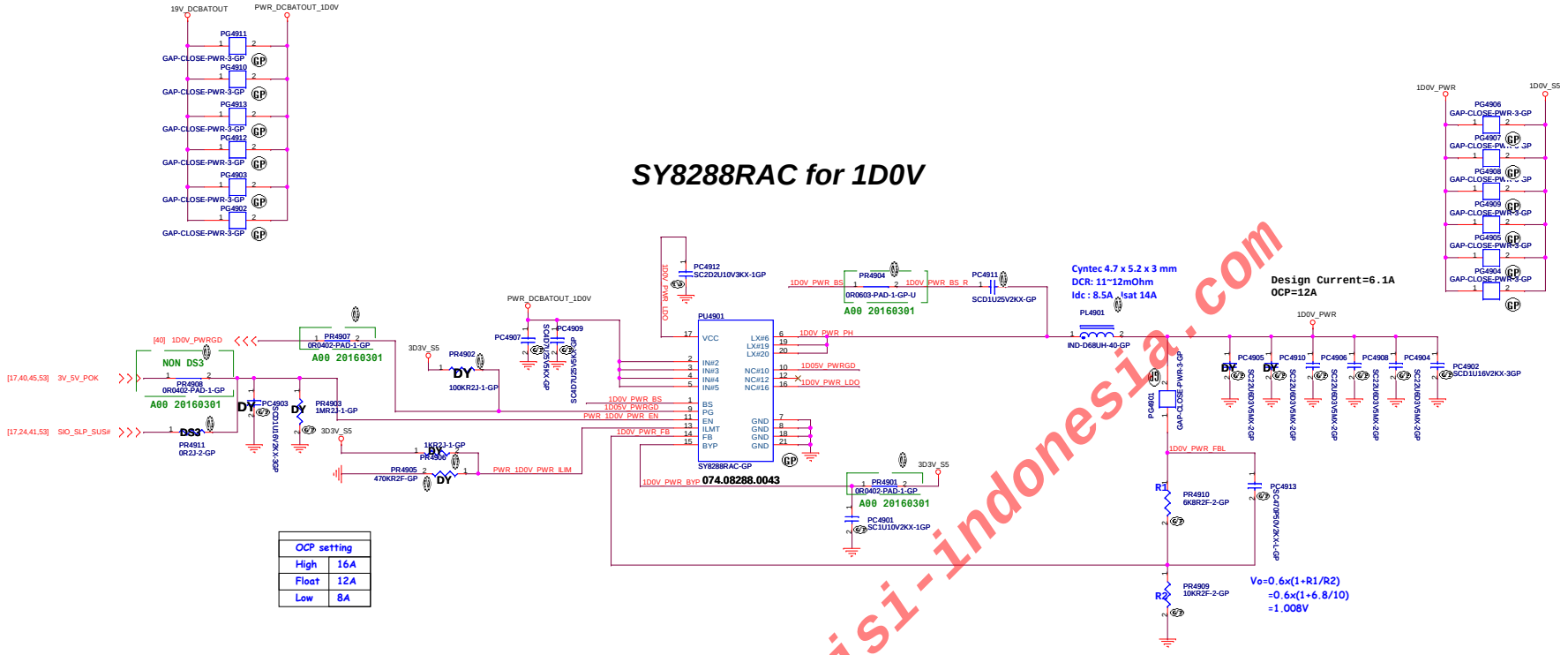

OCP setting	
High	16A
Float	12A
Low	8A

www.teknisi-indonesia.com

<Core Design>

Wistron Corporation
21F, 88, Sec.1, Hsin Tai Wu Rd., Hsichih,
Taipei Hsien 221, Taiwan, R.O.C.

Title: SY8288_1D0V

Size: A2 | Document Number: Drax SKL Y | Rev: A00

Date: Tuesday, March 22, 2016 | Sheet 49 of 109

Main Func = CPU_CORE

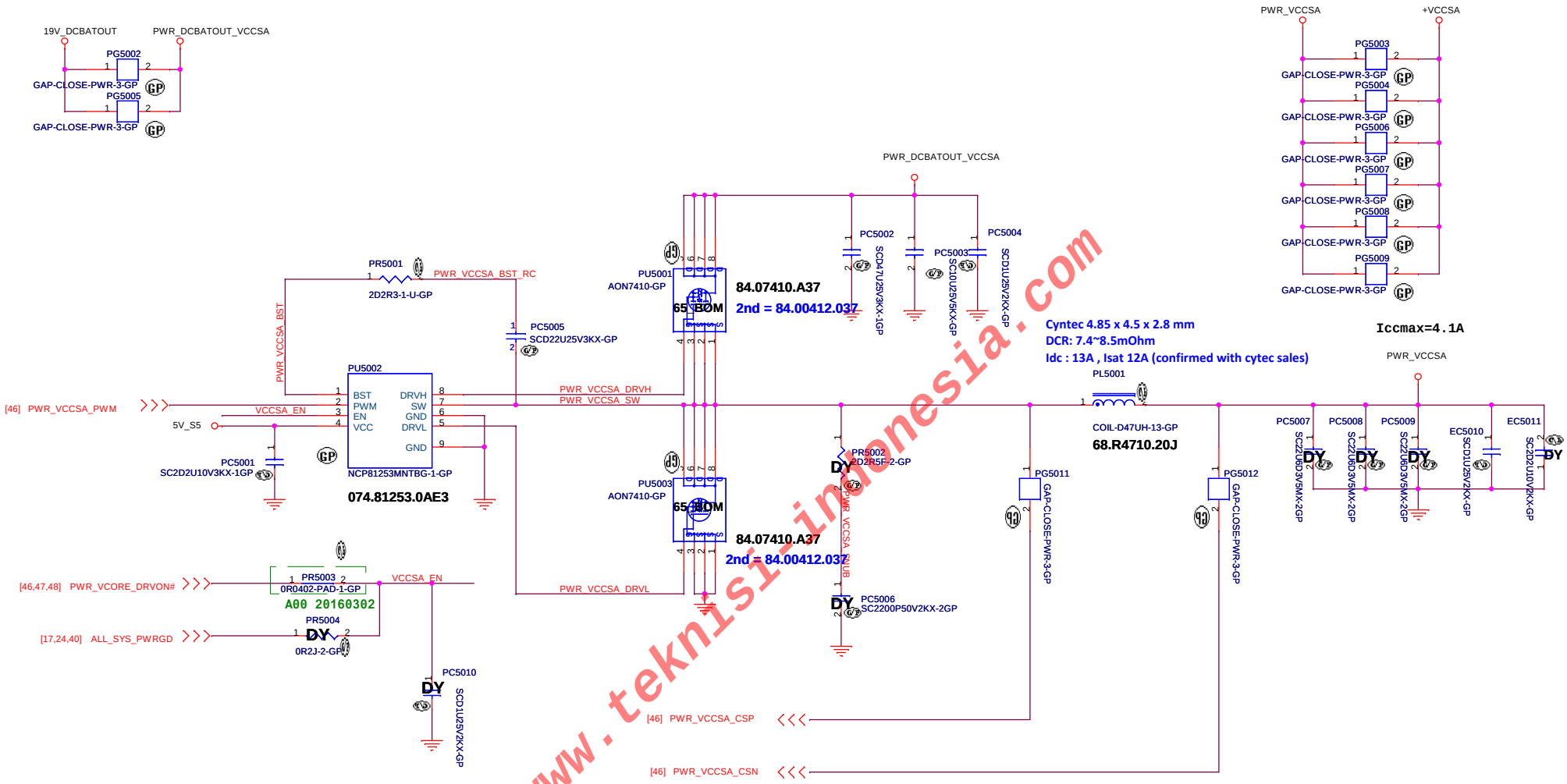

www.teknisi-indonesia.com

<Core Design>

Wistron Corporation
21F, 88, Sec.1, Hsin Tai Wu Rd., Hsichih,
Taipei Hsien 221, Taiwan, R.O.C.

Title	NCP81253MN_CPU_VCCSA	
Size A3	Document Number: Drax SKL Y	Rev A00
Date: Tuesday, March 22, 2016	Sheet 50 of 109	

SSID = PWR.Plane.Regulator_1p2v

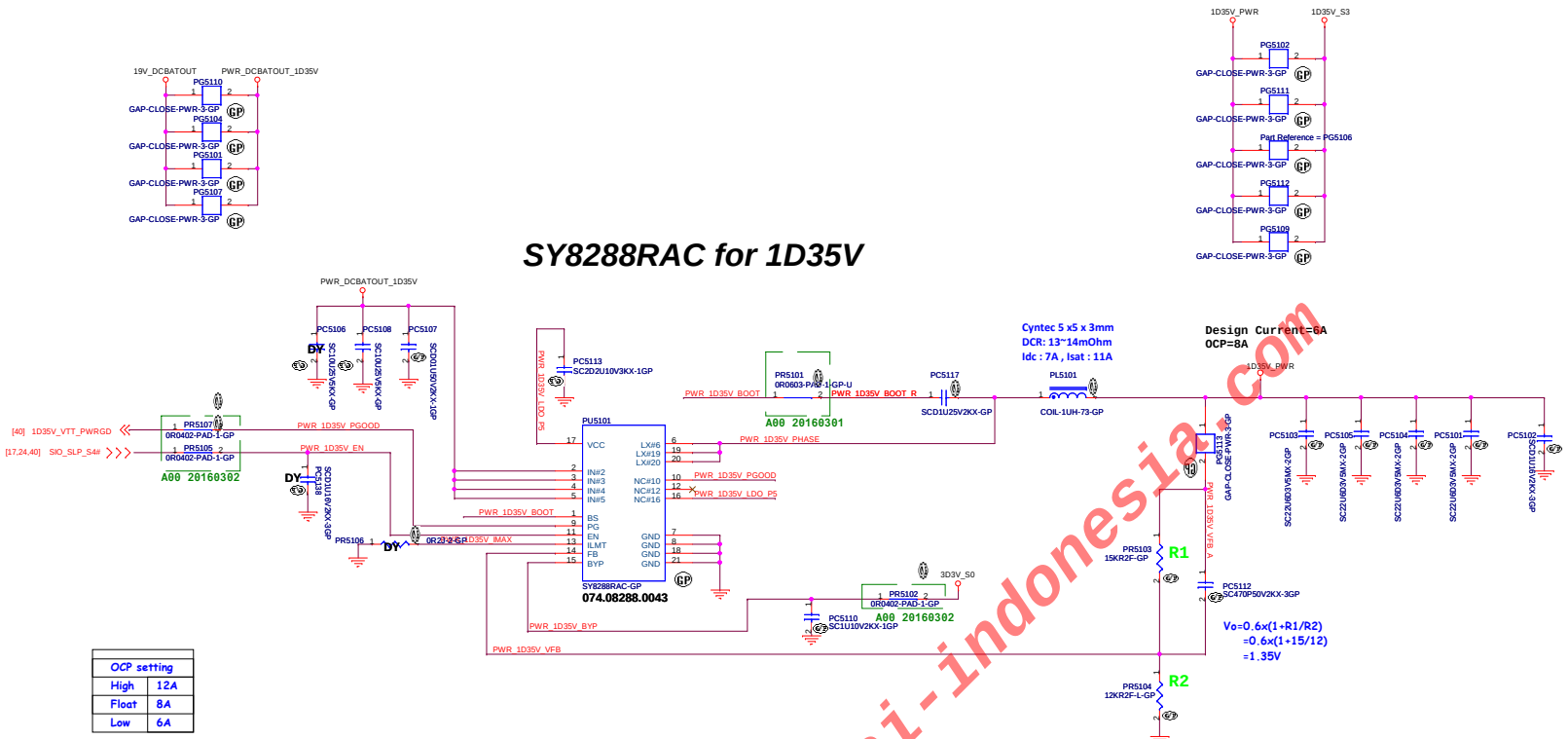

www.teknisi-indonesia.com

<Core Design>

Wistron Corporation
21F, 88, Sec.1, Hsin Tai Wu Rd., Hsichih,
Taipei Hsien 221, Taiwan, R.O.C.

Title: SY8288_1D35V/APL5338_0D675V

Size	Document Number	Rev
A2	Drax SKL Y	A00

Date: Thursday, March 17, 2016 Sheet 51 of 109

Blanking

www.teknisi-indonesia.com

<Core Design>

Wistron Corporation
21F, 88, Sec.1, Hsin Tai Wu Rd., Hsichih,
Taipei Hsien 221, Taiwan, R.O.C.

Title	S1339D15_1D5V	
Size A4	Document Number Drax SKL Y	Rev A00
Date: Thursday, March 17, 2016	Sheet 52 of 109	

SSID = PWR.Plane.Regulator_1p8v

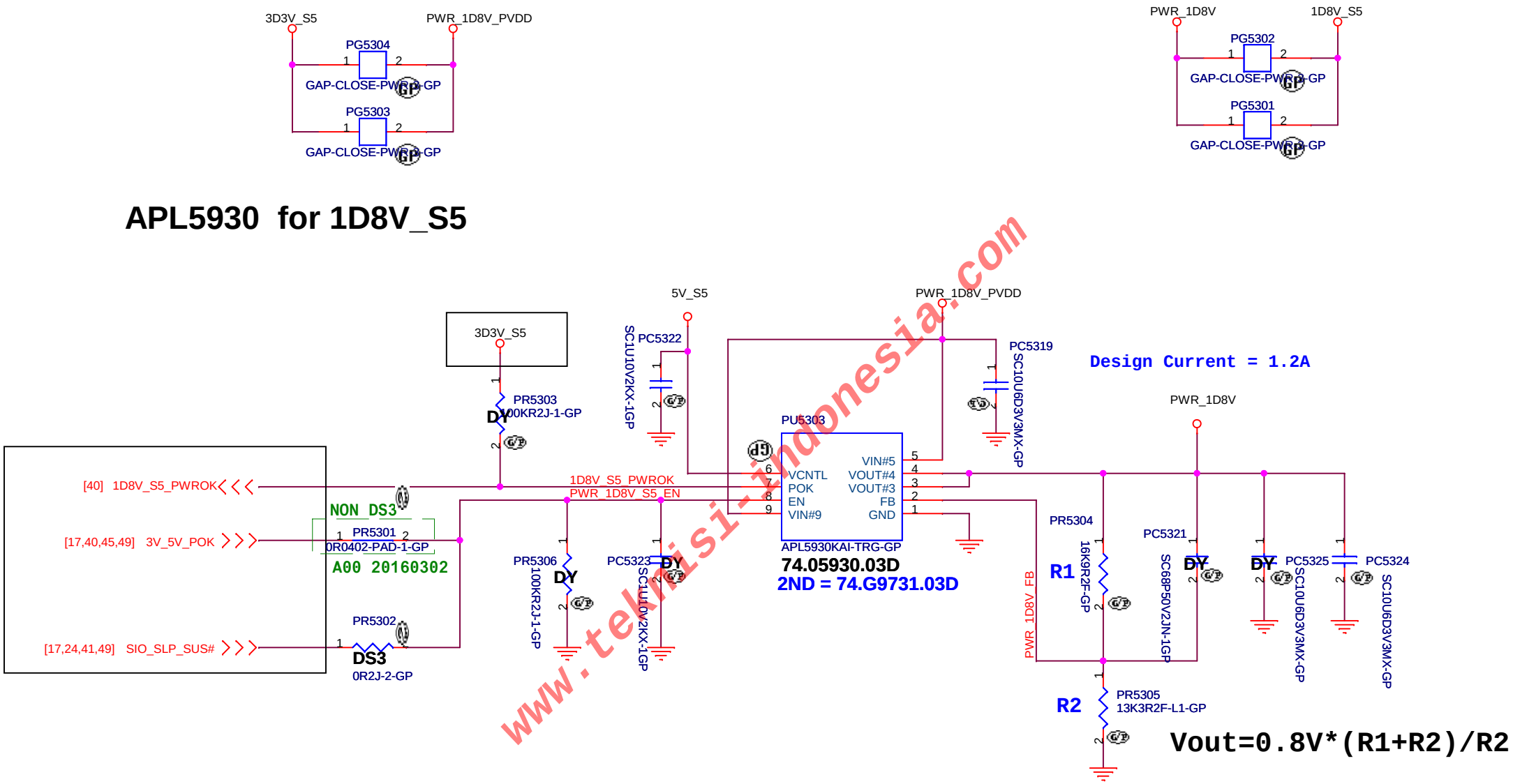

www.teknisi-indonesia.com

<Core Design>

Wistron Corporation
21F, 88, Sec.1, Hsin Tai Wu Rd., Hsichih,
Taipei Hsien 221, Taiwan, R.O.C.

Title	SYW232_1D8V	
Size A4	Document Number Drax SKL Y	Rev A00
Date: Tuesday, March 22, 2016	Sheet 53 of 109	

Blanking

www.teknisi-indonesia.com

<Core Design>

Wistron Corporation
21F, 88, Sec.1, Hsin Tai Wu Rd., Hsichih,
Taipei Hsien 221, Taiwan, R.O.C.

Title	APL5930_1D24V	
Size A4	Document Number Drax SKL Y	Rev A00
Date: Thursday, March 17, 2016	Sheet 54 of 109	

SSID = VIDEO

Panel Conn.

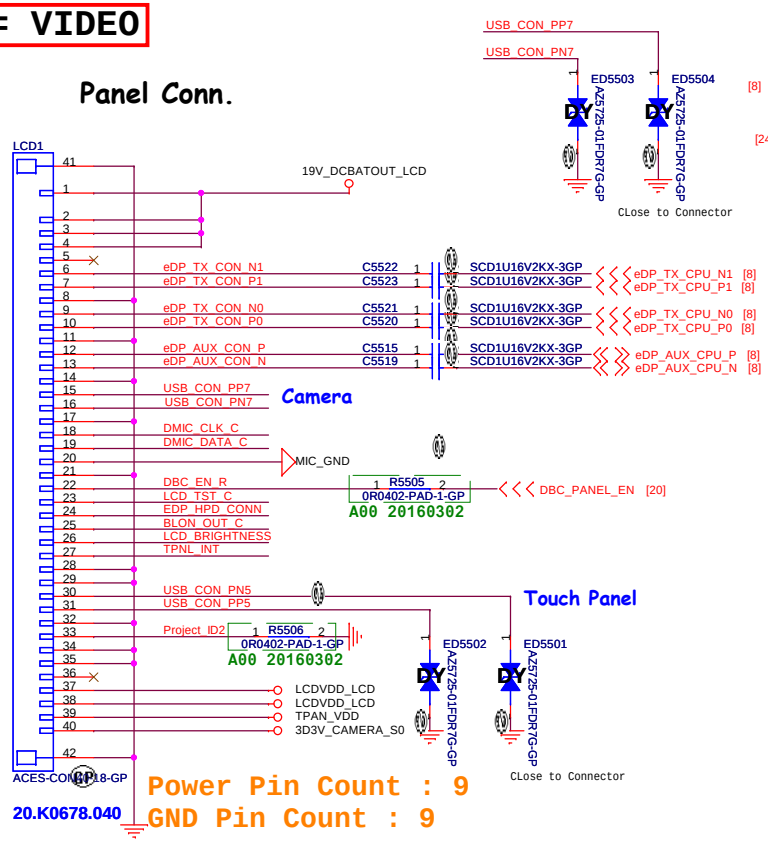

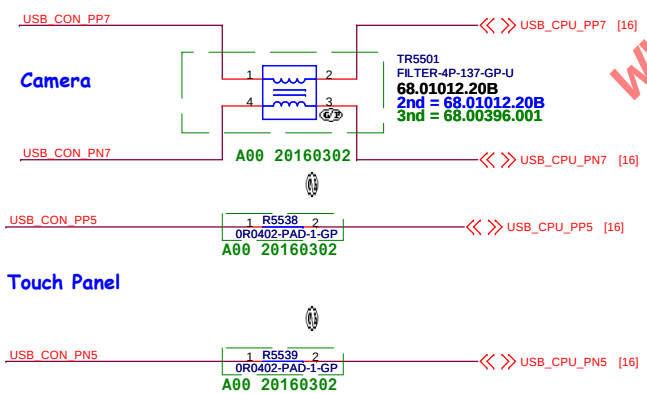

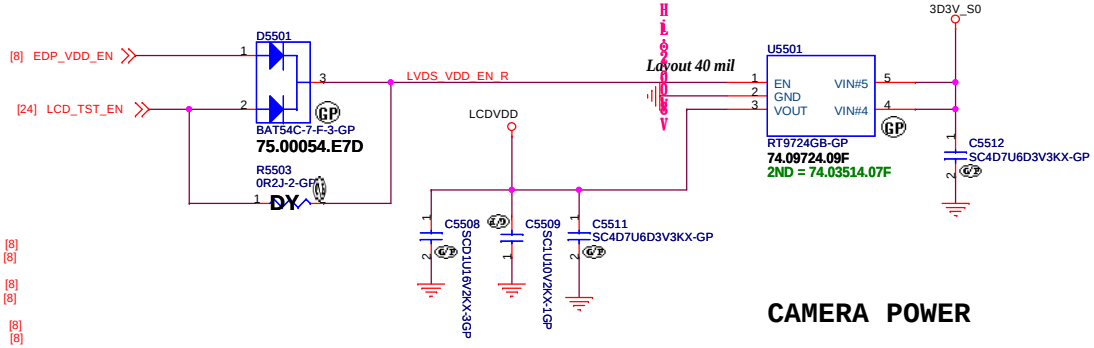

CAMERA POWER

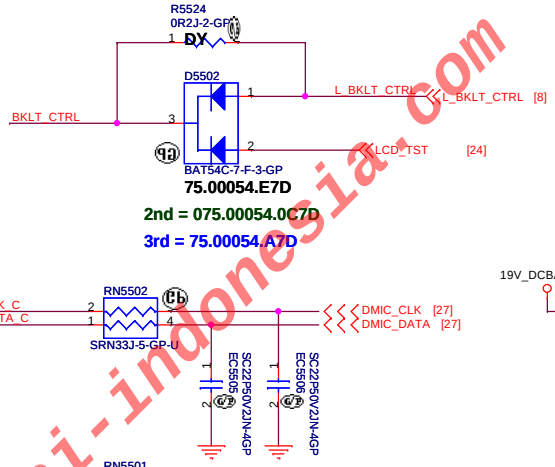

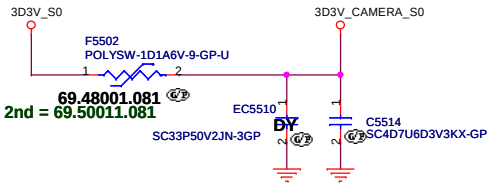

INVERTER POWER

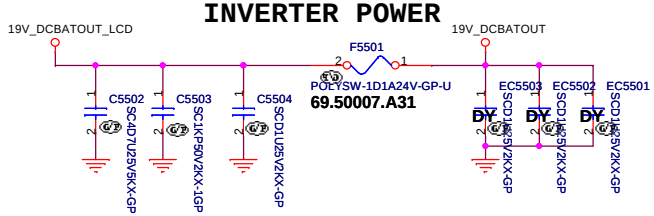

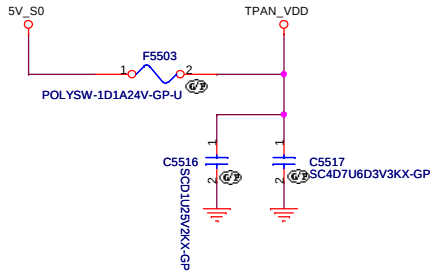

EE note: Never change R5211 to short pad after MP

www.teknisi-indonesia.com

<Core Design>

Wistron Corporation
21F, 88, Sec.1, Hsin Tai Wu Rd., Hsichih,
Taipei Hsien 221, Taiwan, R.O.C.

Title: HDMI Level Shifter/Connector

Size: A3 | Document Number: Drax SKL Y | Rev: A00

Date: Tuesday, March 22, 2016 | Sheet 55 of 109

Blanking

www.teknisi-indonesia.com

<Core Design>

Wistron Corporation
21F, 88, Sec.1, Hsin Tai Wu Rd., Hsichih,
Taipei Hsien 221, Taiwan, R.O.C.

Title	*(Reserved)*	
Size A4	Document Number *Drax SKL Y*	Rev *A00*
Date: Thursday, March 17, 2016	Sheet 56 of 109	

SSID = VIDEO

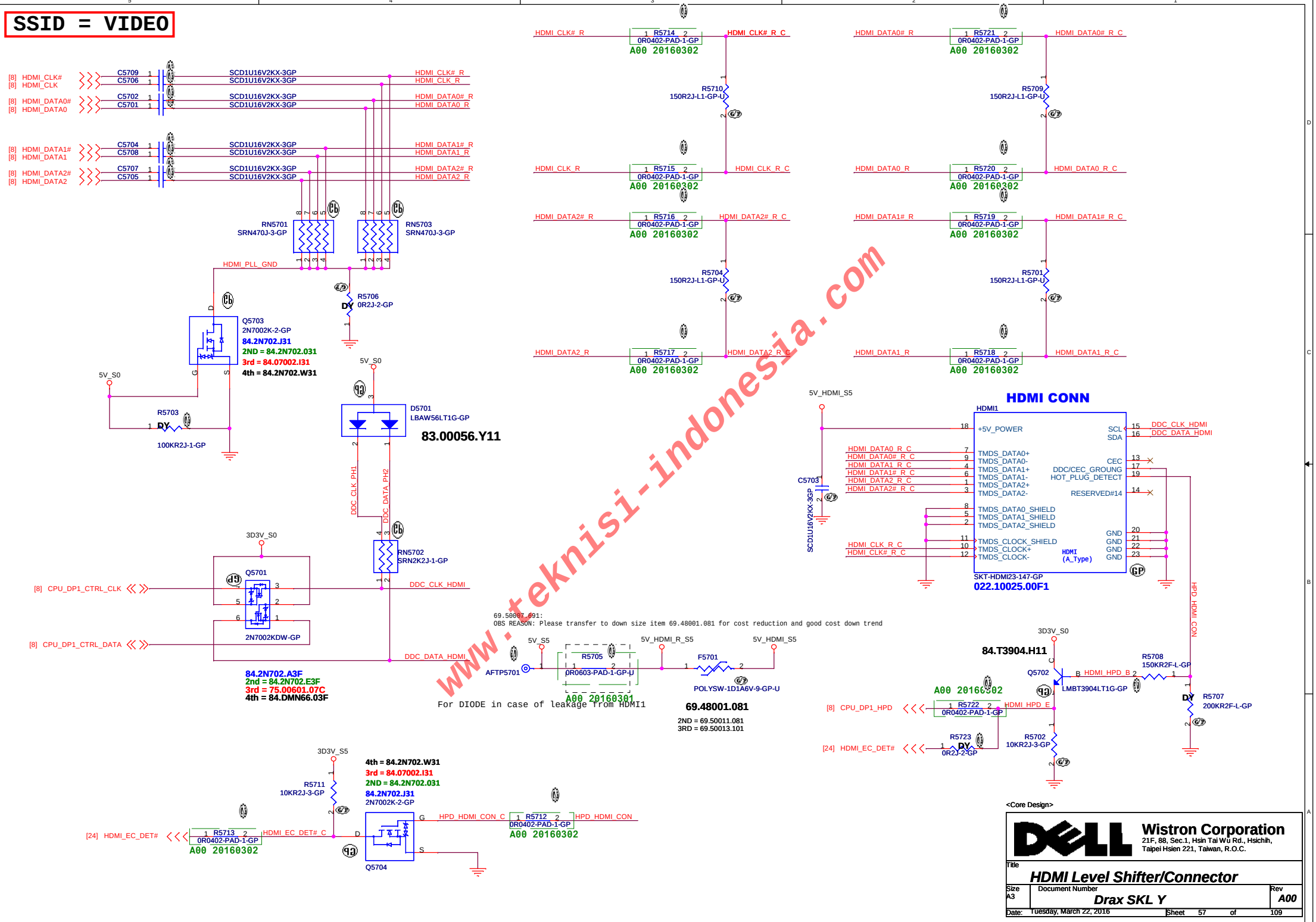

www.teknisi-indonesia.com

<Core Design>

Wistron Corporation
21F, 88, Sec.1, Hsin Tai Wu Rd., Hsichih,
Taipei Hsien 221, Taiwan, R.O.C.

Title: **HDMI Level Shifter/Connector**

Size: A3 | Document Number: **Drax SKL Y** | Rev: **A00**

Date: Tuesday, March 22, 2016 | Sheet 57 of 109

SSID = Display Port

Blanking

www.teknisi-indonesia.com

<Core Design>

Wistron Corporation
21F, 88, Sec.1, Hsin Tai Wu Rd., Hsichih,
Taipei Hsien 221, Taiwan, R.O.C.

Title	(Reserved) Display Port	
Size	Document Number: Drax SKL Y	Rev: A00
Date: Thursday, March 17, 2016	Sheet 58 of 109	

SSID = DVI

Blanking

www.teknisi-indonesia.com

<Core Design>

Wistron Corporation
21F, 88, Sec.1, Hsin Tai Wu Rd., Hsichih,
Taipei Hsien 221, Taiwan, R.O.C.

Title	(Reserved) DVI	
Size	Document Number: Drax SKL Y	Rev: A00
Date: Thursday, March 17, 2016	Sheet 59 of 109	

SSID = SATA

SATA HDD Connector

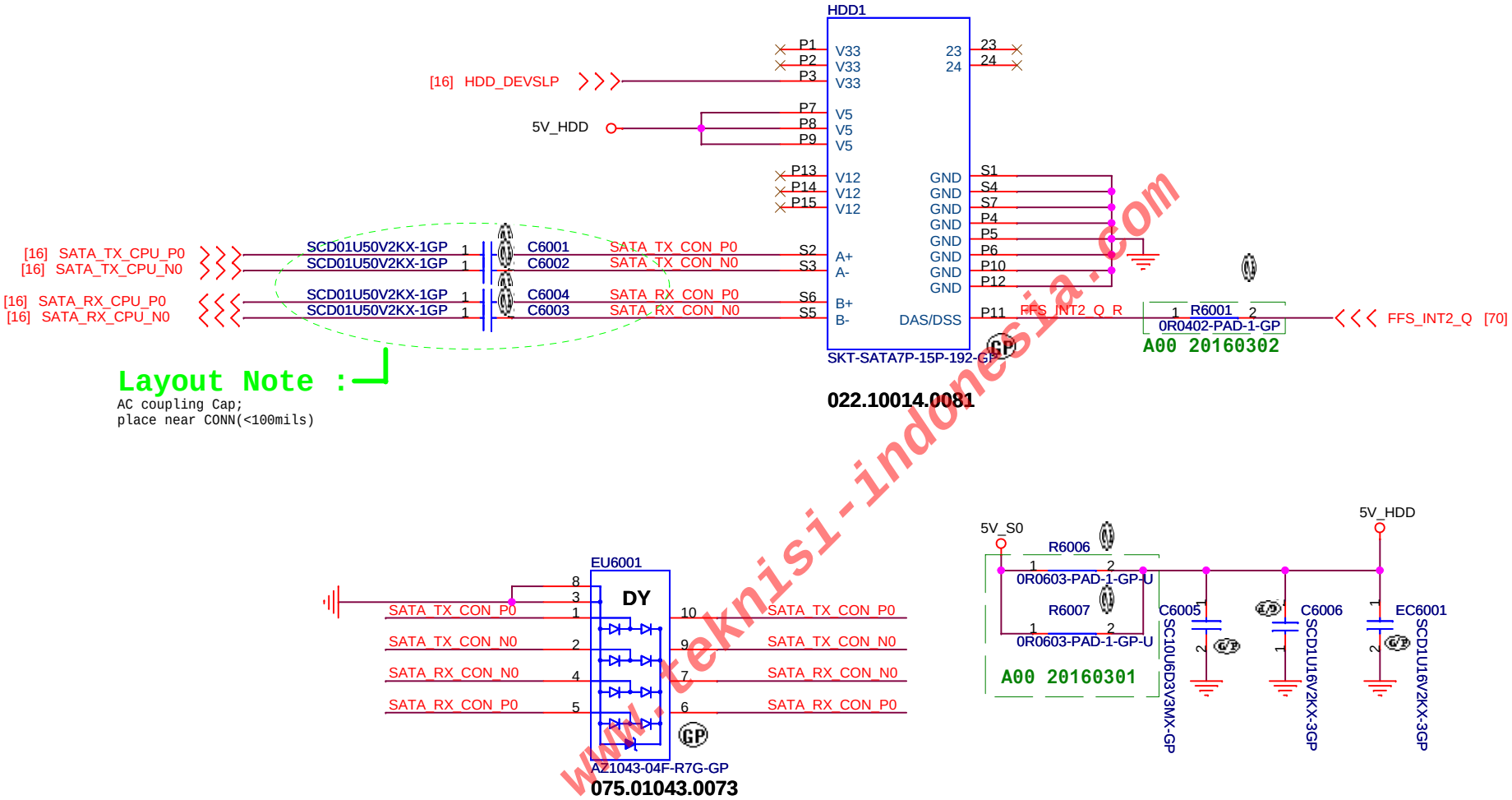

www.teknisi-indonesia.com

<Core Design>

Wistron Corporation
21F, 88, Sec.1, Hsin Tai Wu Rd., Hsichih,
Taipei Hsien 221, Taiwan, R.O.C.

Title	HDD	
Size	Document Number: Drax SKL Y	Rev: A00
Date: Tuesday, March 22, 2016	Sheet 60 of 109	

SSID = WLAN

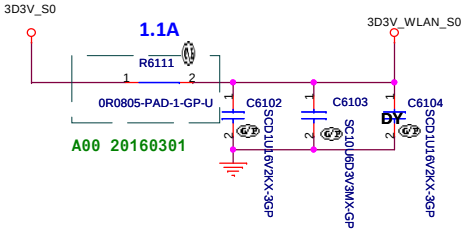

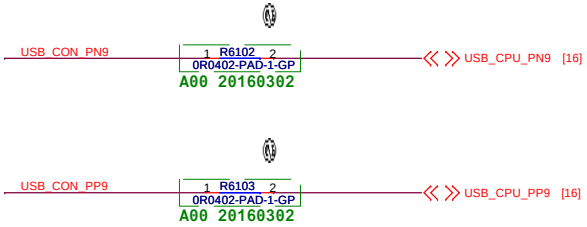

Mini Card Connector(802.11a/b/g)

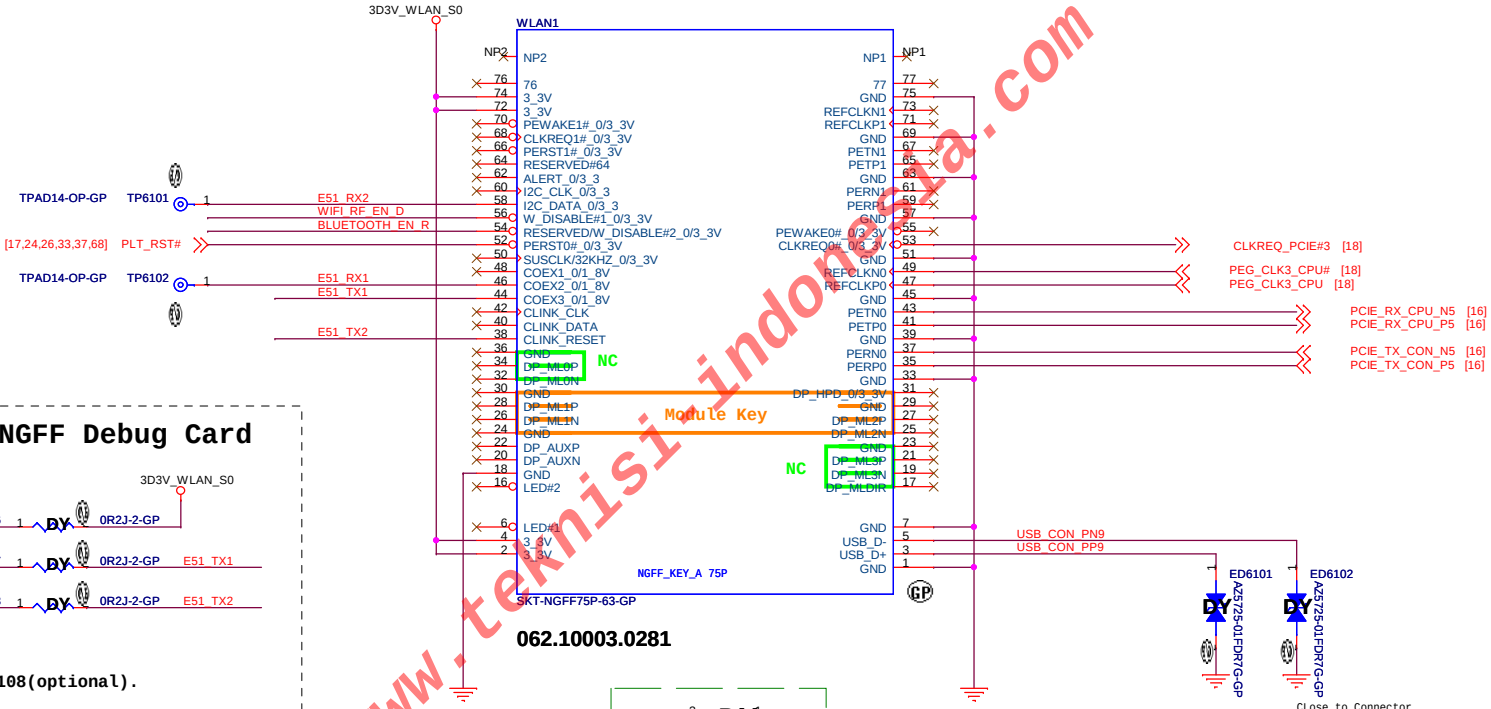

Reserved for NGFF Debug Card

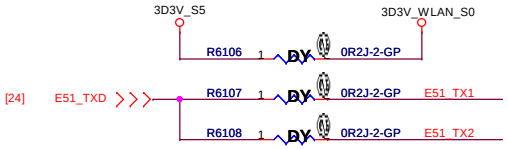

EE Note:
For NFGG Debug Card:
Stuff R6106,R6107,R6108(optional).
DY R6105

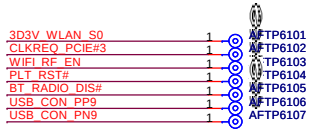

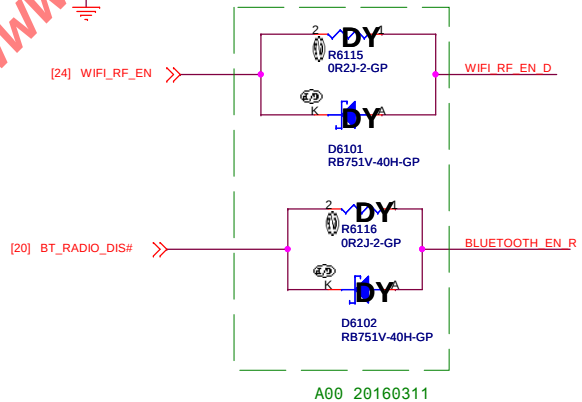

www.teknisi-indonesia.com

<Core Design>

Wistron Corporation
21F, 88, Sec.1, Hsin Tai Wu Rd., Hsichih,
Taipei Hsien 221, Taiwan, R.O.C.

Title: WLAN

Size | Document Number: Drax SKL Y | Rev: A00

Date: Tuesday, March 22, 2016 | Sheet 61 of 109

SSID = WWAN

Blanking

www.teknisi-indonesia.com

<Core Design>

Wistron Corporation
21F, 88, Sec.1, Hsin Tai Wu Rd., Hsichih,
Taipei Hsien 221, Taiwan, R.O.C.

Title	(Reserved) WWAN	
Size	Document Number: Drax SKL Y	Rev: A00
Date: Thursday, March 17, 2016	Sheet 62 of 109	

SSID = SSD-NGFF

Blanking

www.teknisi-indonesia.com

<Core Design>

Wistron Corporation
21F, 88, Sec.1, Hsin Tai Wu Rd., Hsichih,
Taipei Hsien 221, Taiwan, R.O.C.

Title	eMMC	
Size A4	Document Number Drax SKL Y	Rev A00
Date: Thursday, March 17, 2016	Sheet 63 of 109	

SSID = LED / PWRBTN

Blanking

www.teknisi-indonesia.com

<Core Design>

Wistron Corporation
21F, 88, Sec.1, Hsin Tai Wu Rd., Hsichih,
Taipei Hsien 221, Taiwan, R.O.C.

Title	LED / PWRBTN	
Size A4	Document Number Drax SKL Y	Rev A00
Date: Thursday, March 17, 2016	Sheet 64 of 109	

Main Func = KB

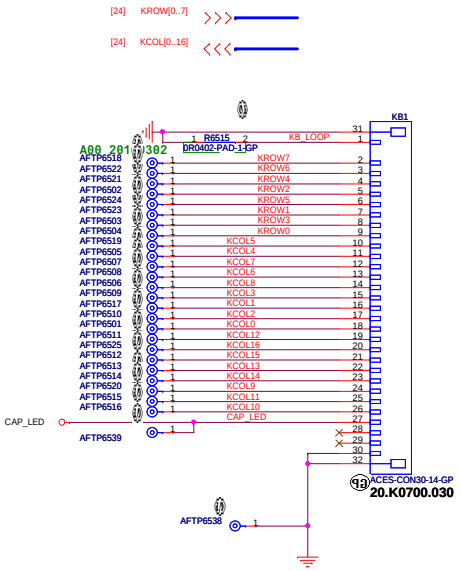

PIN#	SIGNAL
1	Diag_Loop=GPIO_I(TPC)
2	KSI [7] = KBD S8
3	KSI [6] = KBD S7
4	KSI [4] = KBD S5
5	KSI [2] = KBD S3
6	KSI [5] = KBD S6
7	KSI [1] = KBD S2
8	KSI [3] = KBD S4
9	KSI [0] = KBD S1
10	KSO [5] = KBD D6
11	KSO [4] = KBD D5
12	KSO [7] = KBD D8
13	KSO [6] = KBD D7
14	KSO [8] = KBD D9
15	KSO [3] = KBD D4
16	KSO [1] = KBD D2
17	KSO [2] = KBD D3
18	KSO [0] = KBD D1
19	KSO [12] = KBD D13
20	KSO [16] = KBD D17
21	KSO [15] = KBD D16
22	KSO [13] = KBD D14
23	KSO [14] = KBD D15
24	KSO [9] = KBD D10
25	KSO [11] = KBD D12
26	KSO [10] = KBD D11
27	CapsLock LED
28	N/C
29	N/C
30	GND

CAP LED Control

LOW actived from KBC GPIO

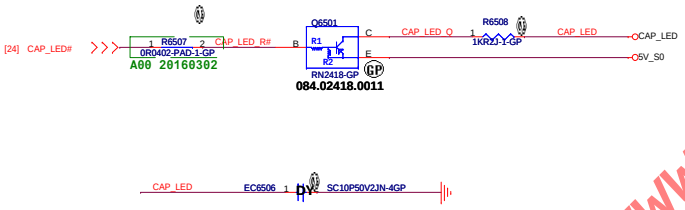

Main Func = TPAD

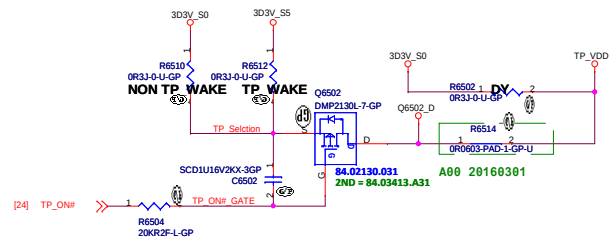

TP_VDD Discharge Circuit

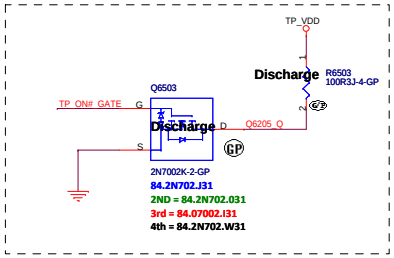

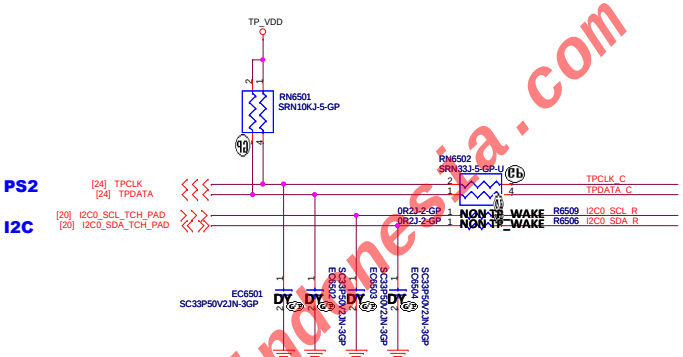

Touch Pad Connector

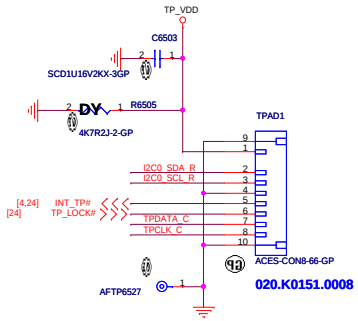

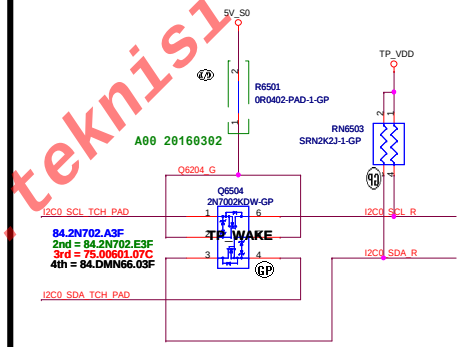

Pin number	Pin name
1	VDD
2	DAT(I2C)
3	CLK(I2C)
4	GND
5	ATTN
6	GPIO
7	DAT(PS2)
8	CLK(PS2)

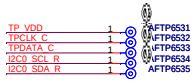

Need to check if it is Active High or Active Low and check if there is PH on TPAD side.

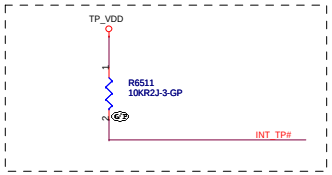

www.teknisi-indonesia.com

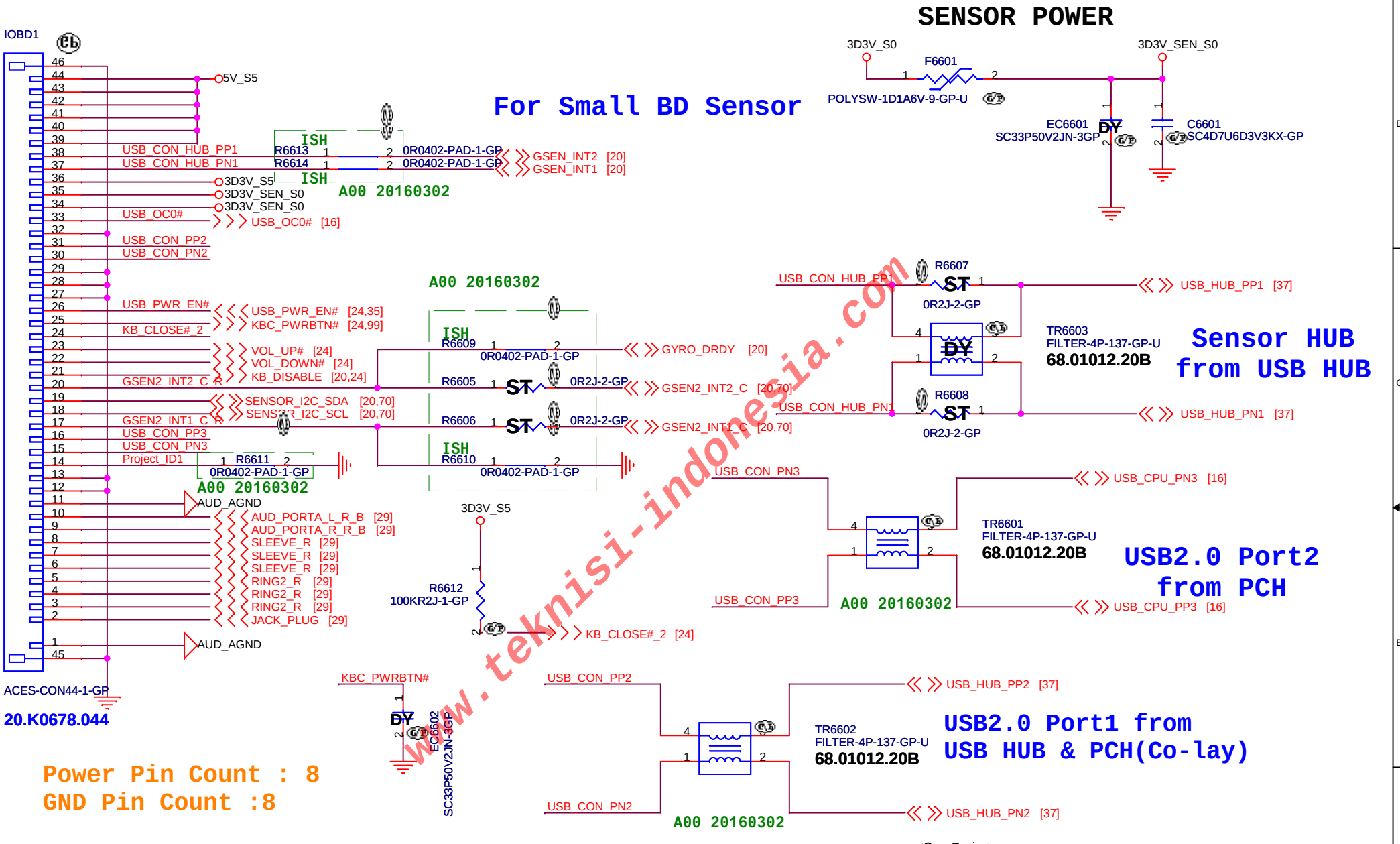

<Core Design>

Wistron Corporation
21F, 88, Sec.1, Hsin Tai Wu Rd., Hsichih,
Taipei Hsien 221, Taiwan, R.O.C.

Title: *IO Board CONN*

Size	Document Number	Rev
A4	Drax SKL Y	A00

Date: Tuesday, March 22, 2016 Sheet 66 of 109

Blanking

www.teknisi-indonesia.com

<Core Design>

Wistron Corporation
21F, 88, Sec.1, Hsin Tai Wu Rd., Hsichih,
Taipei Hsien 221, Taiwan, R.O.C.

Title	Hall Sensor	
Size A4	Document Number Drax SKL Y	Rev A00
Date: Thursday, March 17, 2016	Sheet 67 of 109	

SSID = Debug CONN

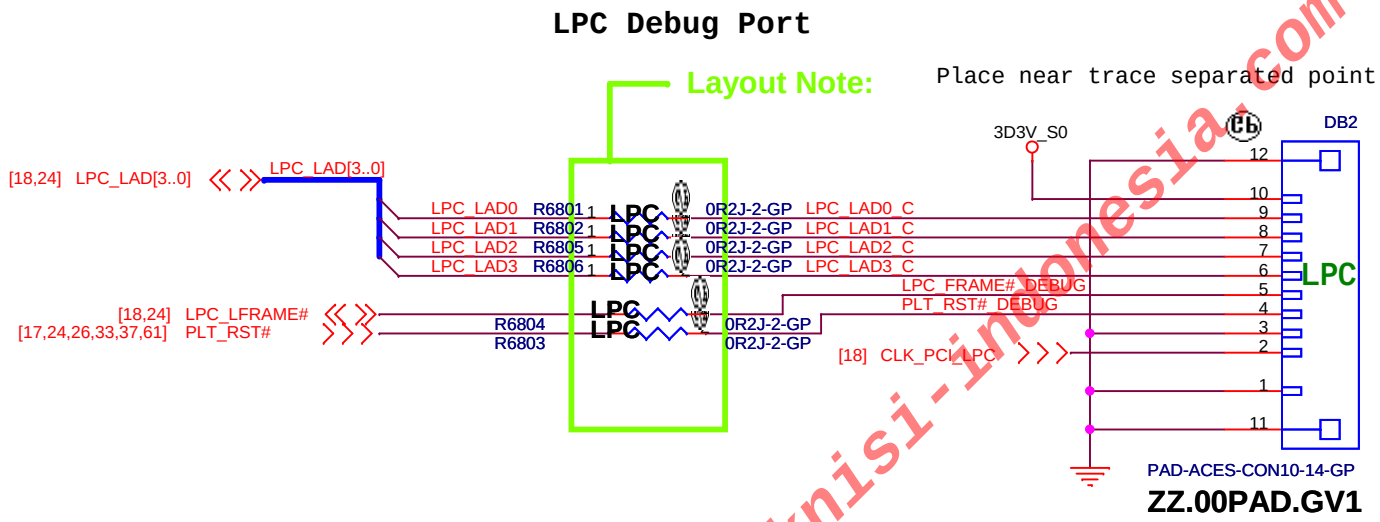

20.F1180.010: Dummy Pad with solder mask is ZZ.00PAD.GV1

A00 20160302

www.teknisi-indonesia.com

<Core Design>

Wistron Corporation
21F, 88, Sec.1, Hsin Tai Wu Rd., Hsichih,
Taipei Hsien 221, Taiwan, R.O.C.

Title		
Debug CONN		
Size A4	Document Number Drax SKL Y	Rev A00
Date: Thursday, March 17, 2016	Sheet 68 of 109	

SSID = Sensor

Blanking

www.teknisi-indonesia.com

<Core Design>

Wistron Corporation
21F, 88, Sec.1, Hsin Tai Wu Rd., Hsichih,
Taipei Hsien 221, Taiwan, R.O.C.

Title	Sensor	
Size A4	Document Number Drax SKL Y	Rev A00
Date: Thursday, March 17, 2016	Sheet 69 of 109	

Main Func = Hall Sensor

LID sensor

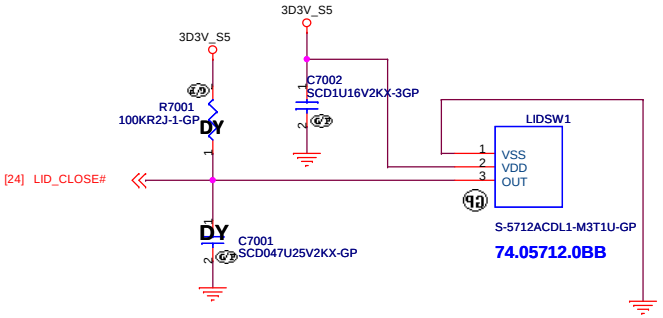

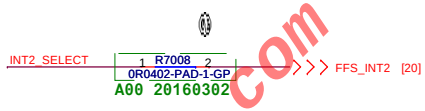

Free Fall Sensor + G Sensor

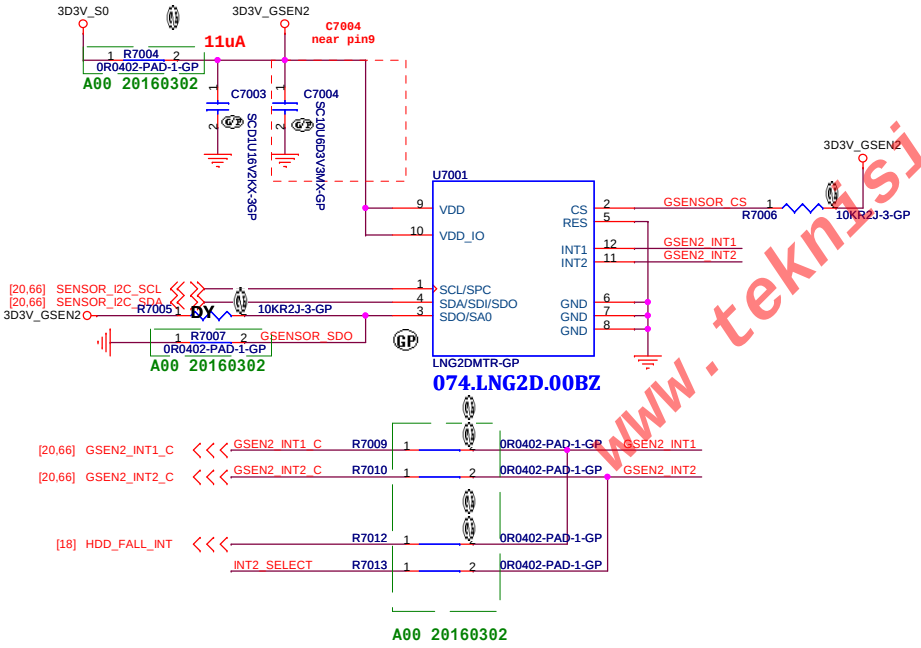

Please help to close with U6602

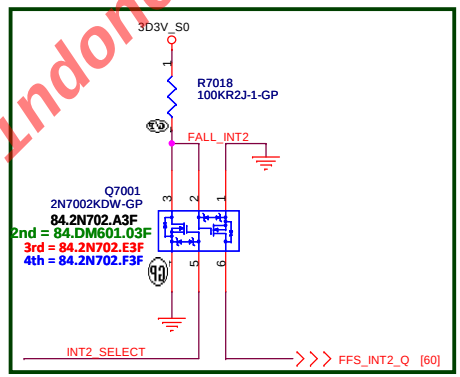

Note:
- no via, trace, under the sensor (keep out area around 2mm)
- stay away from the screw hole or metal shield soldering joints
- design PCB pad based on our sensor LGA pad size (add 0.1mm)
- solder stencil opening to 90% of the PCB pad size
- mount the sensor near the center of mass of the NB as possible as you can

Note:
(1) Keep all signals are the same trace width. (included VDD, GND).
(2) No VIA under IC bottom.

www.teknisi-indonesia.com

Blanking

www.teknisi-indonesia.com

<Core Design>

Wistron Corporation
21F, 88, Sec.1, Hsin Tai Wu Rd., Hsichih,
Taipei Hsien 221, Taiwan, R.O.C.

Title	***(Reserved)Thunderbolt (1/5)***	
Size A4	Document Number ***Drax SKL Y***	Rev ***A00***
Date: Thursday, March 17, 2016	Sheet 71 of 109	

Blanking

www.teknisi-indonesia.com

<Core Design>

Wistron Corporation
21F, 88, Sec.1, Hsin Tai Wu Rd., Hsichih,
Taipei Hsien 221, Taiwan, R.O.C.

Title	(Reserved)Thunderbolt (2/5)	
Size A4	Document Number Drax SKL Y	Rev A00
Date: Thursday, March 17, 2016	Sheet 72 of 109	

Blanking

www.teknisi-indonesia.com

<Core Design>

Wistron Corporation
21F, 88, Sec.1, Hsin Tai Wu Rd., Hsichih,
Taipei Hsien 221, Taiwan, R.O.C.

Title	(Reserved)Thunderbolt (3/5)	
Size A4	Document Number Drax SKL Y	Rev A00
Date: Thursday, March 17, 2016	Sheet 73 of 109	

Blanking

www.teknisi-indonesia.com

<Core Design>

Wistron Corporation
21F, 88, Sec.1, Hsin Tai Wu Rd., Hsichih,
Taipei Hsien 221, Taiwan, R.O.C.

Title	(Reserved)Thunderbolt (4/5)	
Size A4	Document Number Drax SKL Y	Rev A00
Date: Thursday, March 17, 2016	Sheet 74 of 109	

Blanking

www.teknisi-indonesia.com

<Core Design>

Wistron Corporation
21F, 88, Sec.1, Hsin Tai Wu Rd., Hsichih,
Taipei Hsien 221, Taiwan, R.O.C.

Title	(Reserved)Thunderbolt (5/5)	
Size A4	Document Number Drax SKL Y	Rev A00
Date: Thursday, March 17, 2016	Sheet 75 of 109	

Blanking

www.teknisi-indonesia.com

<Core Design>

Wistron Corporation
21F, 88, Sec.1, Hsin Tai Wu Rd., Hsichih,
Taipei Hsien 221, Taiwan, R.O.C.

Title	(Reserved)GPU (1/5) PEG	
Size A4	Document Number Drax SKL Y	Rev A00
Date: Thursday, March 17, 2016	Sheet 76 of 109	

Blanking

www.teknisi-indonesia.com

<Core Design>

Wistron Corporation
21F, 88, Sec.1, Hsin Tai Wu Rd., Hsichih,
Taipei Hsien 221, Taiwan, R.O.C.

Title	(Reserved)GPU (2/5) DIGITAL	
Size A4	Document Number Drax SKL Y	Rev A00
Date: Thursday, March 17, 2016	Sheet 77 of 109	

Blanking

www.teknisi-indonesia.com

<Core Design>

Wistron Corporation
21F, 88, Sec.1, Hsin Tai Wu Rd., Hsichih,
Taipei Hsien 221, Taiwan, R.O.C.

Title	(Reserved)GPU (3/5) VRAM	
Size A4	Document Number Drax SKL Y	Rev A00
Date: Thursday, March 17, 2016	Sheet 78 of 109	

Blanking

www.teknisi-indonesia.com

<Core Design>

Wistron Corporation
21F, 88, Sec.1, Hsin Tai Wu Rd., Hsichih,
Taipei Hsien 221, Taiwan, R.O.C.

Title	(Reserved)GPU (4/5) GPIO	
Size A4	Document Number Drax SKL Y	Rev A00
Date: Thursday, March 17, 2016	Sheet 79 of 109	

Blanking

www.teknisi-indonesia.com

<Core Design>

Wistron Corporation
21F, 88, Sec.1, Hsin Tai Wu Rd., Hsichih,
Taipei Hsien 221, Taiwan, R.O.C.

Title	(Reserved)GPU (5/5) PWR/GND	
Size A4	Document Number Drax SKL Y	Rev A00
Date: Thursday, March 17, 2016	Sheet 80 of 109	

Blanking

www.teknisi-indonesia.com

<Core Design>

Wistron Corporation
21F, 88, Sec.1, Hsin Tai Wu Rd., Hsichih,
Taipei Hsien 221, Taiwan, R.O.C.

Title: (Reserved)VRAM1,2 (1/4)

Size	Document Number	Rev
A4	Drax SKL Y	A00

Date: Thursday, March 17, 2016 | Sheet 81 of 109

Blanking

www.teknisi-indonesia.com

<Core Design>

Wistron Corporation
21F, 88, Sec.1, Hsin Tai Wu Rd., Hsichih,
Taipei Hsien 221, Taiwan, R.O.C.

Title	(Reserved)VRAM3,4 (2/4)	
Size A4	Document Number Drax SKL Y	Rev A00
Date: Thursday, March 17, 2016	Sheet 82 of 109	

Blanking

www.teknisi-indonesia.com

<Core Design>

Wistron Corporation
21F, 88, Sec.1, Hsin Tai Wu Rd., Hsichih,
Taipei Hsien 221, Taiwan, R.O.C.

Title	(Reserved)VRAM5,6 (3/4)	
Size A4	Document Number Drax SKL Y	Rev A00
Date: Thursday, March 17, 2016	Sheet 83 of 109	

Blanking

www.teknisi-indonesia.com

<Core Design>

Wistron Corporation
21F, 88, Sec.1, Hsin Tai Wu Rd., Hsichih,
Taipei Hsien 221, Taiwan, R.O.C.

Title	(Reserved)VRAM7,8 (4/4)	
Size A4	Document Number Drax SKL Y	Rev A00
Date: Thursday, March 17, 2016	Sheet 84 of 109	

Blanking

www.teknisi-indonesia.com

<Core Design>

Wistron Corporation
21F, 88, Sec.1, Hsin Tai Wu Rd., Hsichih,
Taipei Hsien 221, Taiwan, R.O.C.

Title	(Reserved)VGA_CORE	
Size A4	Document Number Drax SKL Y	Rev A00
Date: Thursday, March 17, 2016	Sheet 85 of 109	

Blanking

www.teknisi-indonesia.com

<Core Design>

Wistron Corporation
21F, 88, Sec.1, Hsin Tai Wu Rd., Hsichih,
Taipei Hsien 221, Taiwan, R.O.C.

Title	(Reserved)DISCRETE VGAPOWER	
Size	Document Number: Drax SKL Y	Rev: A00
Date: Thursday, March 17, 2016	Sheet 86 of 109	

Blanking

www.teknisi-indonesia.com

<Core Design>

Wistron Corporation
21F, 88, Sec.1, Hsin Tai Wu Rd., Hsichih,
Taipei Hsien 221, Taiwan, R.O.C.

Title

(Reserved)

Size	Document Number	Rev
A4	**Drax SKL Y**	**A00**

Date: Thursday, March 17, 2016 Sheet 87 of 109

Blanking

www.teknisi-indonesia.com

<Core Design>

Wistron Corporation
21F, 88, Sec.1, Hsin Tai Wu Rd., Hsichih,
Taipei Hsien 221, Taiwan, R.O.C.

Title	***(Reserved)***	
Size: A4	Document Number: ***Drax SKL Y***	Rev: ***A00***
Date: Thursday, March 17, 2016	Sheet 88 of 109	

Main Func = UnusedParts

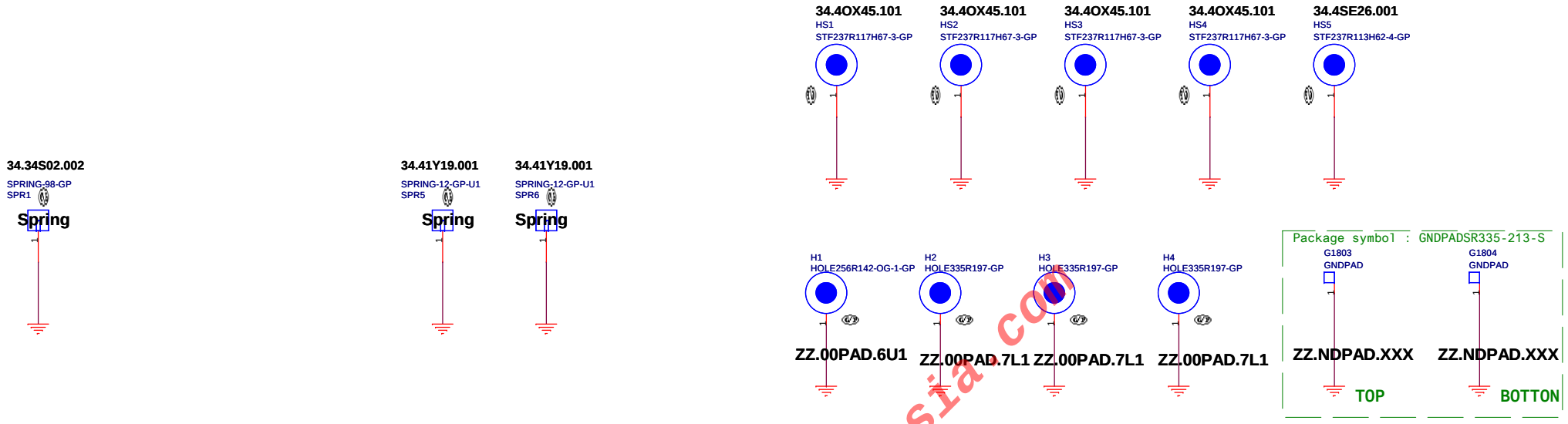

Main Func = EMICapacitors

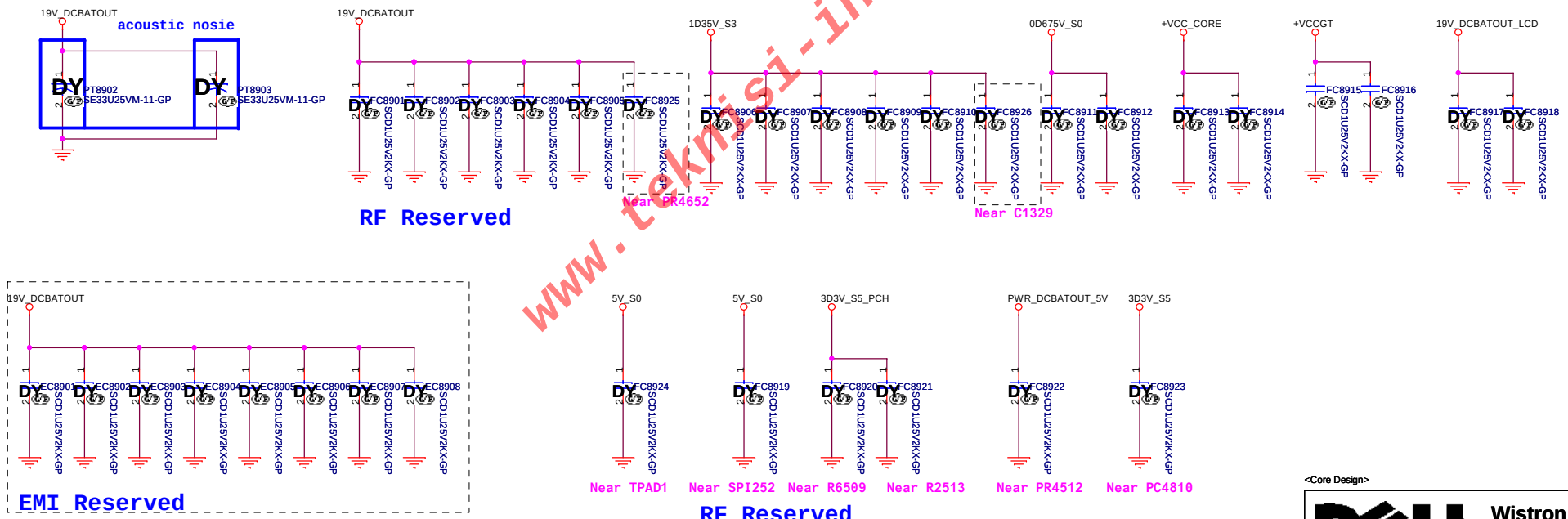

www.teknisi-indonesia.com

<Core Design>

Wistron Corporation
21F, 88, Sec.1, Hsin Tai Wu Rd., Hsichih,
Taipei Hsien 221, Taiwan, R.O.C.

Title: ***UNUSED PARTS/EMI Capacitors***

Size	Document Number	Rev
A3	*Drax SKL Y*	*A00*

Date: Tuesday, March 22, 2016 Sheet 89 of 109

Blanking

www.teknisi-indonesia.com

<Core Design>

Wistron Corporation
21F, 88, Sec.1, Hsin Tai Wu Rd., Hsichih,
Taipei Hsien 221, Taiwan, R.O.C.

Title	(Reserved)NFC Connector	
Size A4	Document Number Drax SKL Y	Rev A00
Date: Thursday, March 17, 2016	Sheet 90 of 109	

Blanking

www.teknisi-indonesia.com

<Core Design>

Wistron Corporation
21F, 88, Sec.1, Hsin Tai Wu Rd., Hsichih,
Taipei Hsien 221, Taiwan, R.O.C.

Title	(Reserved) TPM	
Size A4	Document Number Drax SKL Y	Rev A00
Date: Thursday, March 17, 2016	Sheet 91 of 109	

Blanking

www.teknisi-indonesia.com

<Core Design>

Wistron Corporation
21F, 88, Sec.1, Hsin Tai Wu Rd., Hsichih,
Taipei Hsien 221, Taiwan, R.O.C.

Title	***(Reserved)Finger Print***	
Size A4	Document Number ***Drax SKL Y***	Rev ***A00***
Date: Thursday, March 17, 2016	Sheet 92 of 109	

Blanking

www.teknisi-indonesia.com

<Core Design>

Wistron Corporation
21F, 88, Sec.1, Hsin Tai Wu Rd., Hsichih,
Taipei Hsien 221, Taiwan, R.O.C.

Title	(Reserved)Express Card	
Size A4	Document Number Drax SKL Y	Rev A00
Date: Thursday, March 17, 2016	Sheet 93 of 109	

Blanking

www.teknisi-indonesia.com

<Core Design>

Wistron Corporation
21F, 88, Sec.1, Hsin Tai Wu Rd., Hsichih,
Taipei Hsien 221, Taiwan, R.O.C.

Title	(Reserved)Smart Card Socket	
Size A4	Document Number Drax SKL Y	Rev A00
Date: Thursday, March 17, 2016	Sheet 94 of 109	

Blanking

www.teknisi-indonesia.com

<Core Design>

Wistron Corporation
21F, 88, Sec.1, Hsin Tai Wu Rd., Hsichih,
Taipei Hsien 221, Taiwan, R.O.C.

Title	(Reserved)SW GFX eDP	
Size A4	Document Number Drax SKL Y	Rev A00
Date: Thursday, March 17, 2016	Sheet 95 of 109	

SSID = DEBUG PORT

Blanking

www.teknisi-indonesia.com

<Core Design>

Wistron Corporation
21F, 88, Sec.1, Hsin Tai Wu Rd., Hsichih,
Taipei Hsien 221, Taiwan, R.O.C.

Title	CPU_XDP	
Size A4	Document Number Drax SKL Y	Rev A00
Date: Thursday, March 17, 2016	Sheet 96 of 109	

Blanking

www.teknisi-indonesia.com

<Core Design>

Wistron Corporation
21F, 88, Sec.1, Hsin Tai Wu Rd., Hsichih,
Taipei Hsien 221, Taiwan, R.O.C.

Title	(Reserved)LAN	
Size A4	Document Number Drax SKL Y	Rev A00
Date: Thursday, March 17, 2016	Sheet 97 of 109	

Blanking

www.teknisi-indonesia.com

<Core Design>

Wistron Corporation
21F, 88, Sec.1, Hsin Tai Wu Rd., Hsichih,
Taipei Hsien 221, Taiwan, R.O.C.

Title	***(Reserved)LAN SWITCH***	
Size	Document Number ***Drax SKL Y***	Rev ***A00***
Date: Thursday, March 17, 2016	Sheet 98 of 109	

SSID = XDP CONN

CPU_XDP

XDP

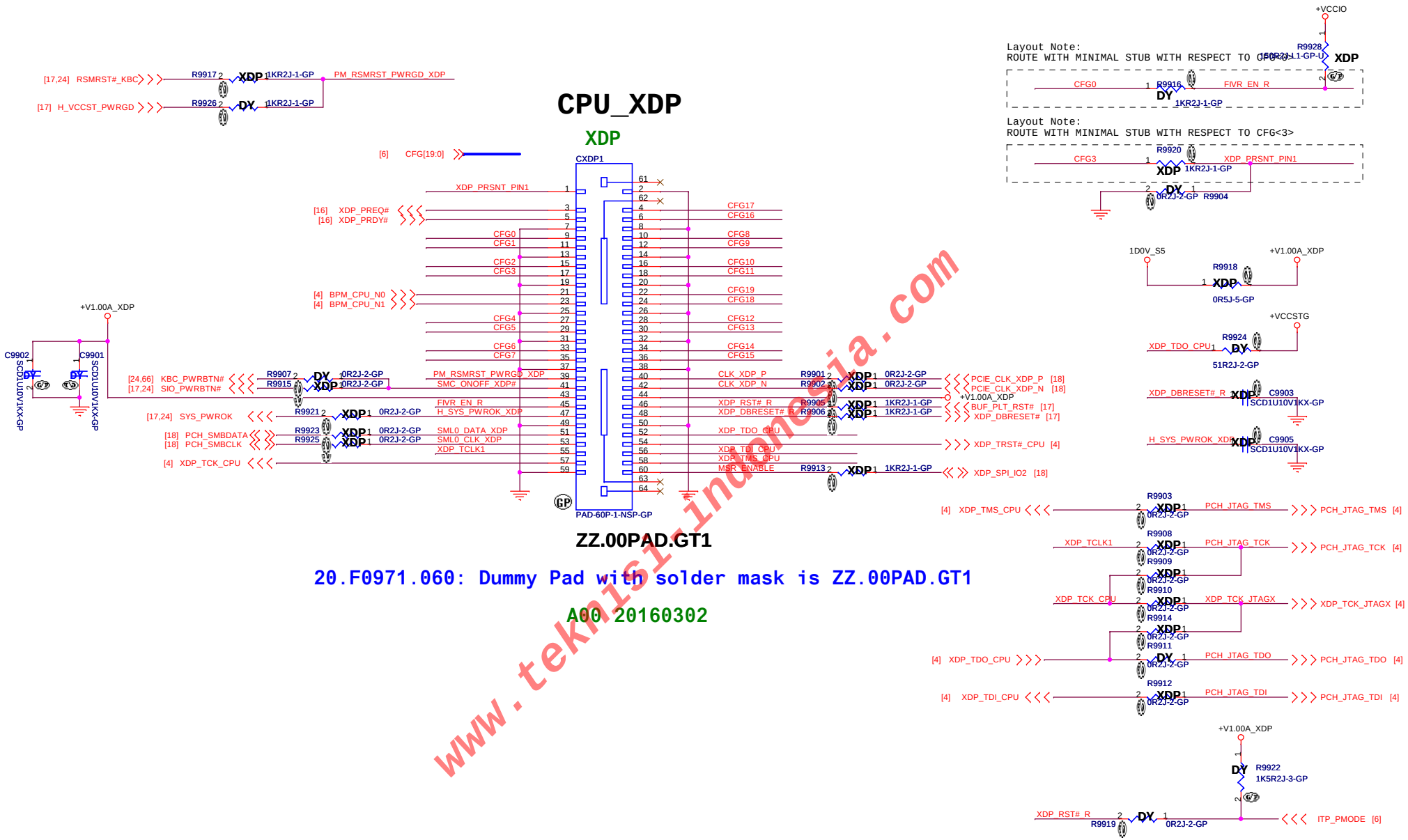

ZZ.00PAD.GT1

20.F0971.060: Dummy Pad with solder mask is ZZ.00PAD.GT1

A00 20160302

www.teknisi-indonesia.com

<Core Design>

DELL	Wistron Corporation 21F, 88, Sec.1, Hsin Tai Wu Rd., Hsichih, Taipei Hsien 221, Taiwan, R.O.C.	
Title	CPU XDP	
Size	Document Number: Drax SKL Y	Rev: A00
Date: Thursday, March 17, 2016	Sheet 99 of 109	

SMBus Block Diagram

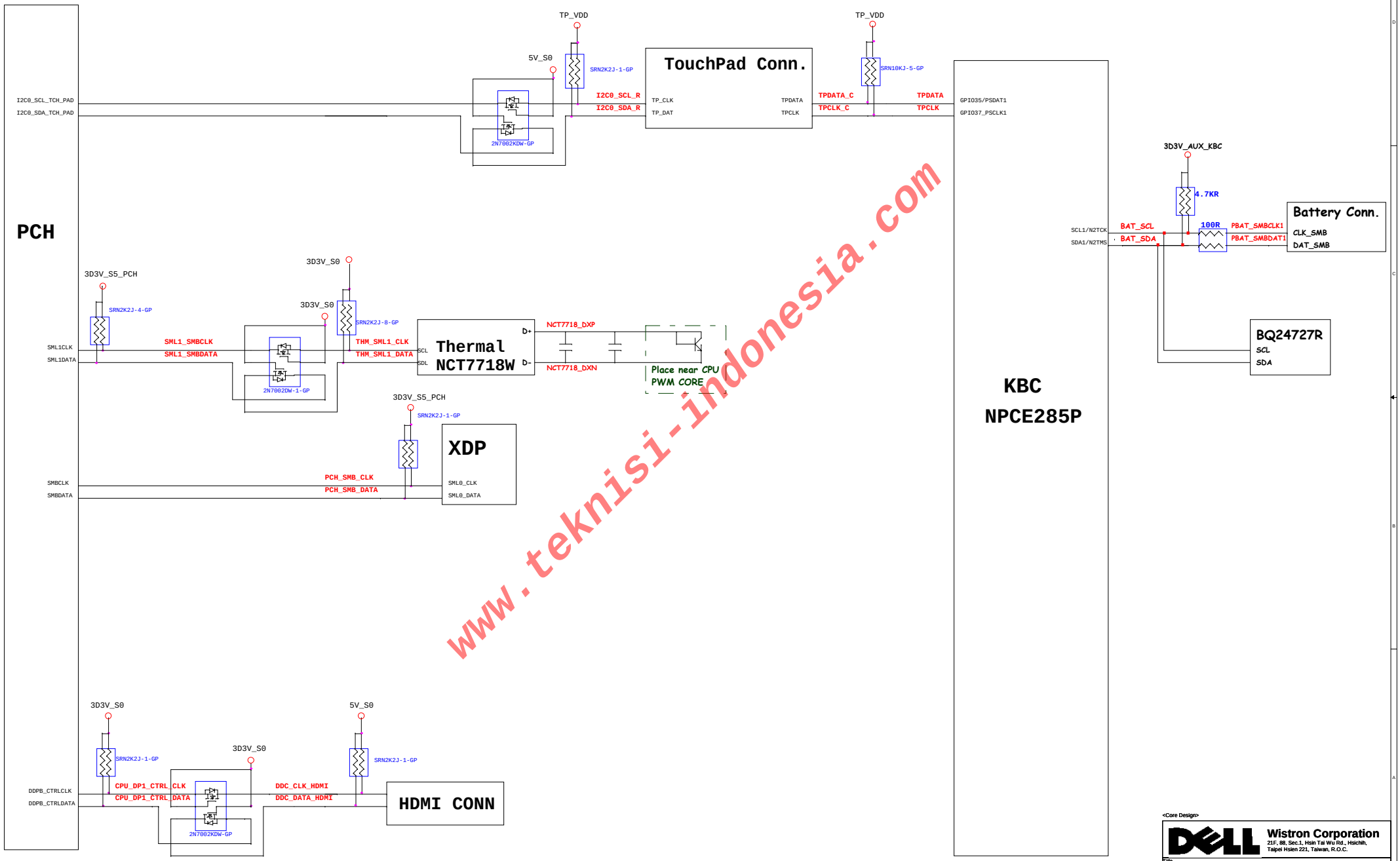

www.teknisi-indonesia.com

<Core Design>

Wistron Corporation
21F, 88, Sec.1, Hsin Tai Wu Rd., Hsichih,
Taipei Hsien 221, Taiwan, R.O.C.

Title: SMBUS Block Diagram

Size | Document Number: Drax SKL Y | Rev: A00

Date: Tuesday, March 22, 2016 | Sheet 104 of 109

Thermal Block Diagram

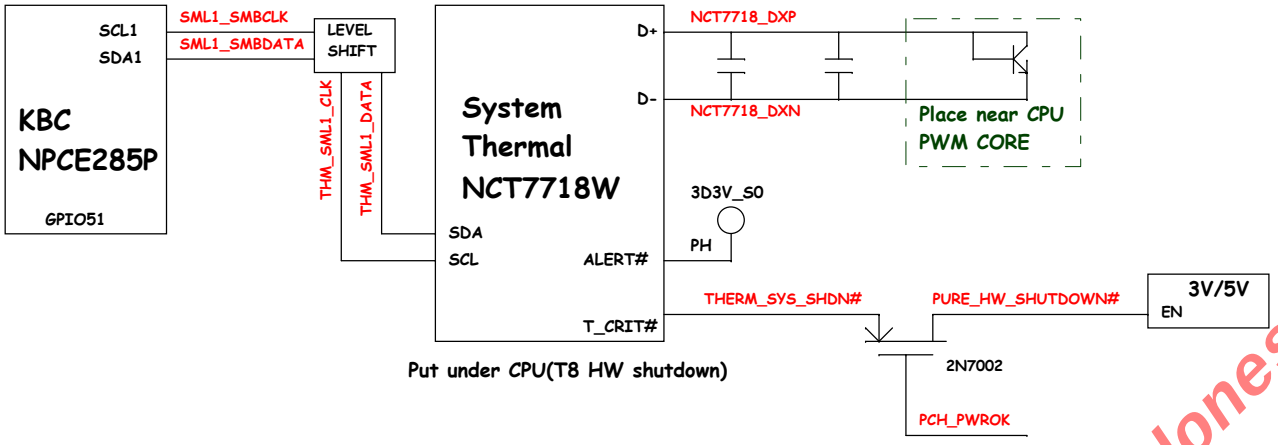

Audio Block Diagram

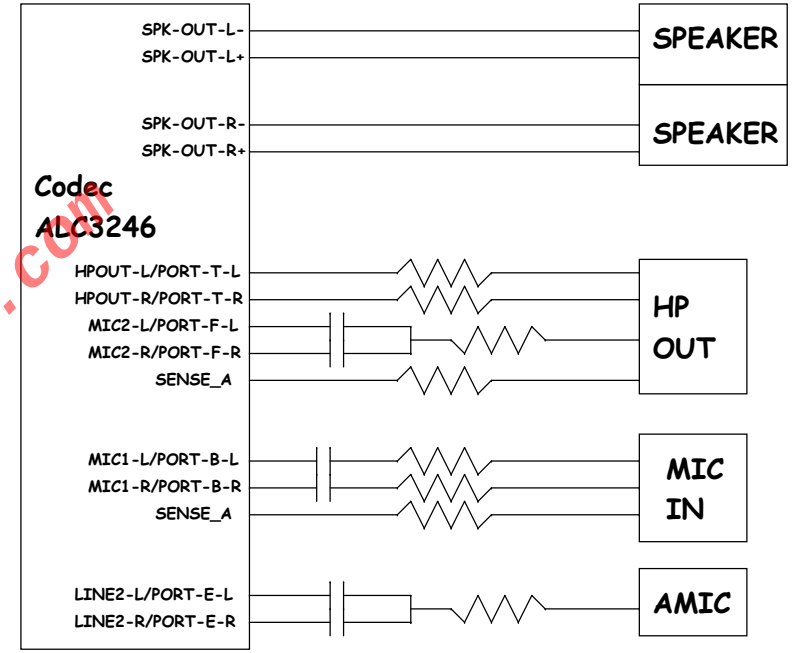

www.teknisi-indonesia.com

<Core Design>

Wistron Corporation
21F, 88, Sec.1, Hsin Tai Wu Rd., Hsichih,
Taipei Hsien 221, Taiwan, R.O.C.

Title		
Thermal/Audio Block Diagram		
Size	Document Number	Rev
	Drax SKL Y	A00

Date: Tuesday, March 22, 2016 Sheet 105 of 109

Item	Page#	Date	Request By	Issue description	Solution Description	Rev.
1						
2						
3						
4						
5						
6						
7						
8						
9						
10						
11						
12						
13						
14						
15						
16						
17						
18						
19						
20						
21						
22						
23						
24						
25						

www.teknisi-indonesia.com

<Core Design>

Wistron Corporation
21F, 88, Sec.1, Hsin Tai Wu Rd., Hsichih,
Taipei Hsien 221, Taiwan, R.O.C.

Title: *Change History-01*

Size | Document Number: *Drax SKL Y* | Rev: *A00*

Date: Tuesday, March 22, 2016 | Sheet 107 of 109

Item	Page#	Date	Request By	Issue description	Solution Description	Rev.

www.teknisi-indonesia.com

<Core Design>

Wistron Corporation
21F, 88, Sec.1, Hsin Tai Wu Rd., Hsichih,
Taipei Hsien 221, Taiwan, R.O.C.

Title: *Change History-02*

Size | Document Number: *Drax SKL Y* | Rev: *A00*

Date: Tuesday, March 22, 2016 | Sheet 108 of 109

Item	Page#	Date	Request By	Issue description	Solution Description	Rev.

www.teknisi-indonesia.com

<Core Design>

Wistron Corporation
21F, 88, Sec.1, Hsin Tai Wu Rd., Hsichih,
Taipei Hsien 221, Taiwan, R.O.C.

Title: *Change History-02*

Size | Document Number: *Drax SKL Y* | Rev: *A00*

Date: Tuesday, March 22, 2016 | Sheet 109 of 109